Steeline
Steel Span 700

ROOF AND WALL CLADDING
ST29

Colorbond® Zincalume®

Steel Span 700 is a practical, aesthetically pleasing roof and wall cladding material which adds value to any building. Made from light gauge, high tensile steel it has an efficiently designed profile, making it light and able to span long distances. It is manufactured locally by continuously roll-forming prefinished material, resulting in a low cost, high quality product.

Steeline

Service over and above

Ph. 1300 STEELINE **steeline.com.au**

Steeline Steel Span 700

ROOF AND WALL CLADDING
ST29

Steel Span has a square corrugated profile with an attractive contemporary look.

Steel Span is ideal for commercial applications where a stronger and longer span is required.

Steel Span is equally popular in domestic roof and walls.

Product Details

PROFILE

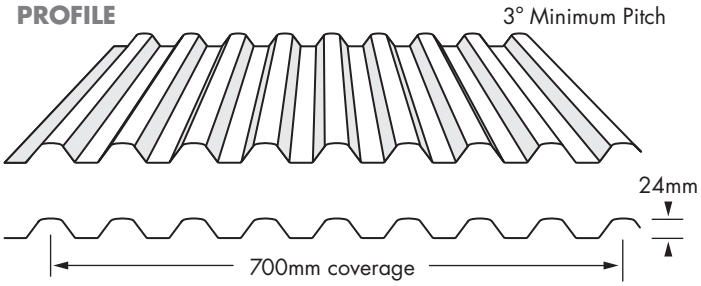

Material Specification

0.42 or 0.48	Zincalume®	G550 AM125
0.42 or 0.48	Galvanised	G550 Z450
0.42 or 0.48	Colorbond®	G550 AM100

SPECIAL ORDERS

Stainless Steel, Metallic, Coolmax and Ultra

Product Mass

BMT		kg/m²
0.42	Zincalume®	4.61
0.42	Colorbond®	4.64
0.42	Galvanised	5.05
0.48	Zincalume®	5.23
0.48	Colorbond®	5.27
0.48	Galvanised	5.69

Wind Load Conversion

WIND CLASSIFICATION	REGION & CATEGORY
(Domestic)	**(Commercial/Industrial)**
N1 (W28)	Reg A, Cat 3
N2 (W33)	Reg A, Cat 2.5 - Reg B, Cat 3
N3 (W41)	Reg A, Cat 2 - Reg B, Cat 2.5
N4 (W50)	Reg B, Cat 2

Maximum Support Spacings (mm)

Type of Span	Thickness (mm)	BMT
	.42	**.48**
ROOFS		
Single Span	1300	2000
End Span	1800	2100
InternalSpan	2400	2700
Unstiffened Eaves Overhang	200	300
WALLS		
Single Span	2400	2700
End Span	2700	2700
InternalSpan	3000	3000
Overhang	200	300

Maximum Support Spacing has been determined by load tests and deflection in accordance with AS 1562-1 AS 4040 1 & 2 1992.

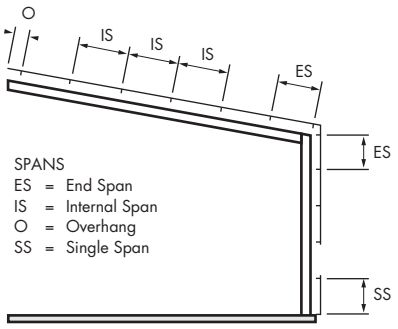

Steeline Steel Span 700

ROOF AND WALL CLADDING
ST29

.42 Bmt Steel Multi Span & Wall

Limit State Wind Pressure Capacities (kpa)

4 Screws per Purlin						Walls Only				
SPAN TYPE		Span mm 900	1200	1300	1500	1800	2100	2400	2700	3000
SINGLE	Serviceability	3.90	3.10	2.70	1.85	1.25	1.10	0.75		
	Strength	8.00	7.00	6.40	5.15	3.75	3.25	2.30		
END	Serviceability	3.60	3.20	2.80	2.50	2.15	1.80	1.60	1.20	0.80
	Strength	6.00	5.55	5.10	4.65	3.70	3.37	3.04	2.70	2.10
INTERNAL	Serviceability	4.20	3.80	3.35	2.90	2.35	2.20	1.70	1.50	1.20
	Strength	8.00	7.00	6.10	5.35	4.40	4.10	3.67	3.25	3.00

.48 Bmt Steel Span Roof & Wall

Limit State Wind Pressure Capacities (kpa)

4 Screws per Purlin						Walls Only				
SPAN TYPE		Span mm 900	1200	1500	1800	2000	2100	2400	2700	3000
SINGLE	Serviceability	5.00	3.05	1.80	1.63	1.15	0.75	0.60		
	Strength	10.00	8.55	7.00	6.50	5.75	3.95	2.60	1.55	1.10
END	Serviceability	5.10	3.85	3.50	2.55	2.35	2.15	1.20	0.95	0.85
	Strength	8.60	6.70	5.80	4.80	3.95	3.75	3.00	2.70	2.65
INTERNAL	Serviceability	5.96	4.85	3.85	3.55	2.90	2.40	1.95	1.72	1.62
	Strength	9.00	8.00	7.00	6.65	5.65	5.25	4.40	4.00	3.80

Compliance

Wind pressure capacitiy tables have been determined by full scale testing in accordance with AS 1562.1 & AS 4040.1&2 1992.

Non-Cyclonic areas.

The pressure considered is based on buildings up to 10m high in Region B, Terrain Category 3, $M_3 = 0.85$, $M_l = 1.0$, $M = 1.0$ with the following assumptions made:

Roofs

$C_{pi} = +0.20$, $C_{pe} = -0.90$, $K_l = 2.0$ for single and end spans, $K_l = 1.5$ for internal spans.

Walls

$C_{pi} = +0.20$, $C_{pe} = -0.65$, $K_l = 2.0$ for single spans, $K_l = 1.5$ for internal spans.

Load Test

Pressure Test

Steeline Steel Span 700

ROOF AND WALL CLADDING
ST29

Fixing Details

Crest: 4 Fasteners

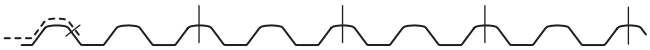

Crest Fix
Roof and Walls

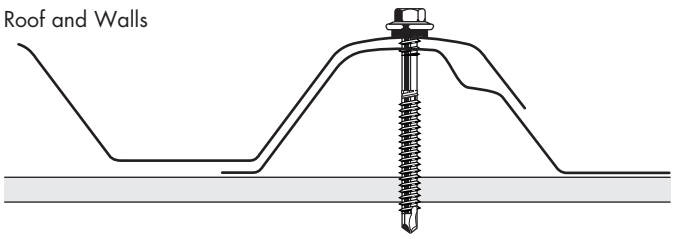

Valley: 4 Fasteners
Walls only

Valley Fix
Walls only

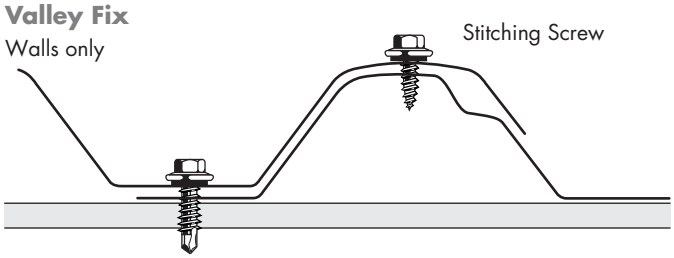

Steel Span Roofing

Should be laid square to the gutter line and into the prevailing wind. The sheet is fastened every second rib. Sheets must be turned up at the apex and down at the gutter line. Side lap fastener is recommended mid span when span exceeds 1200mm.

Steel Span Wall

Steel Span is suitable for walls and has good spanning capabilities. Side lap fastener is recommended when the span exceeds 1200mm.

Design Considerations

The recommended minimum pitch is 3 degrees. For long run roofing the pitch should be increased and spans considered.

Length

- Steel Span is custom cut to your exact length.
- The maximum length for pierce fixed roofing is 23.7m before an expansion joint is required. This length is recommended for light colours only. Dark colours should not exceed 16.0m because of increased thermal expansion.

Foot Traffic

- Always walk over purlins and place your foot print over as many ribs as possible to avoid damage.

Handling On Site

- Delivery to site arrangements to be the responsibility of the customer.
- Sheets should be kept dry and clear of the ground.
- When handling sheets use dry, clean gloves and don't drag sheets over each other.

Cutting

- It is recommended to cut sheets with tin snips or a nibbler. Don't use an abrasive disc cutter.

Expansion Joint

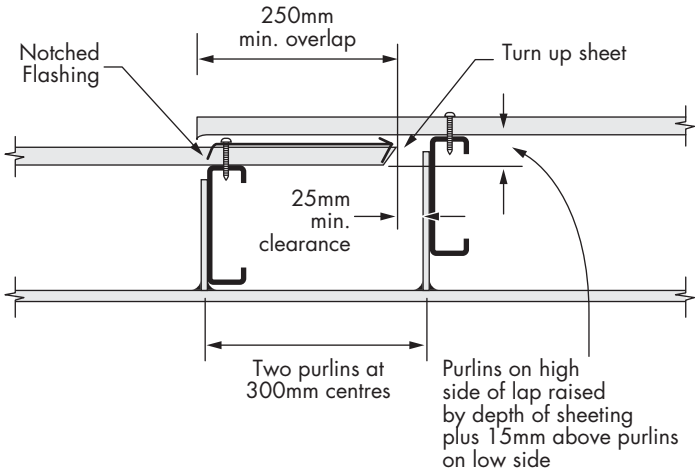

Fasteners

	Fixing to Steel	Fixing to Timber
Crest Fixing Roof Neo Washer	12 - 14 Teks or M6 x 50mm Teks .55-1.0mm Thick Steel	12 Type 17 M6 Teks
Walls Neo Washer	10 - 16 x 16 Teks	12 x 25 Type 17