Kingspan Insulated Panels
Australia

K-PIR™ Roofliner Panel Installation Guide









Formerly known as KS1100/1200RL Roofliner Panel

Why the change?
As part of our new K-PIR™ product branding, this product has been renamed. Only the name has changed, the product remains the same.

K-PIR™

Kingspan®

Third Issue : 29/09/2026

Components: K-PIR™ Roofliner Panel
External profile: Flat
Internal profile: Flat



Primary fastener with 8mm neoprene washer
(Carbon Steel)
(Not supplied by Kingspan)



Pre-coring of the external panel face may be required with some spreader plates (Not supplied by Kingspan)



Roller - Joint Tape
(Not by Kingspan)

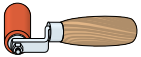

120x2mm EPDM sealing tape
(Code: EPDM120X2X40M)



6x4mm Ø butyl tape sealant
(Code: SEXT)



50 x 1mm butyl nylon tape
(Code SEXT501)



Recessed washer
(Not supplied by Kingspan)

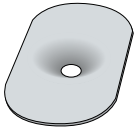

Purlin extension plate
(Not supplied by Kingspan)

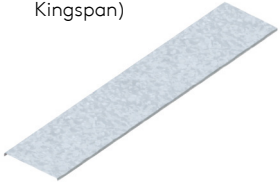

Neutral cure gun-grade sealant
(Not by Kingspan)



Panel clamp
(Not by Kingspan)



Use panel clamps to ensure full engagement of panel joint when required

Fire-rated canister insulation
(Not by Kingspan)



Although this 'installation guide' is deemed to be correct at the time of publication, Kingspan reserve the right to amend the information at any time in the future.

Important Installation Notes

Reference Documents and Scope

- This guide provides general installation guidance and must be used in conjunction with project-specific construction drawings, specifications, and method statements.
- While this is the standard installation guide for K-PIR™ Roofliner Panel (KS1100/1200RL), project specific detailing always takes precedence. Confirm all details against approved project documentation.

1. Substrate Preparation and Pre-Installation Checks

- Ensure all **steelwork is correctly aligned, levelled, and within tolerance** before panel installation begins.
- Do not proceed with installation if structural alignment issues are identified.
- Ensure **minimum 60mm bearing** of panel ends and at intermediate supports onto purlins is achieved at all locations, unless larger bearing width is specified.

2. Fasteners and Fixings

- Use only minimum **Class 4 carbon steel primary fasteners**. Confirm suitability of thread type and drill tip for the structural material. Refer to fastener supplier/ manufacturers information, seeking guidance from them directly if required.
- Fastener quantity must be determined by the project engineer based on span and loads.
- Note that the **wind loads must be confirmed by the project engineer** as Kingspan is not responsible for the wind analysis.
- Install a **minimum of three primary fasteners per panel per support**, unless higher quantities are specified.
- Fit each fastener with a **galvanised steel spreader plate of at least 40mm diameter**.
- Position fasteners **within 100mm of the panel joint edge and at least 30mm from the panel butt end**.
- Set all fasteners using **manufacturer-recommended drill speed and torque**, with the correct socket and drive bit. Use a **depth-limiting nose piece** where applicable.
- Remove all **swarf immediate**ly during drilling to prevent corrosion and surface damage.

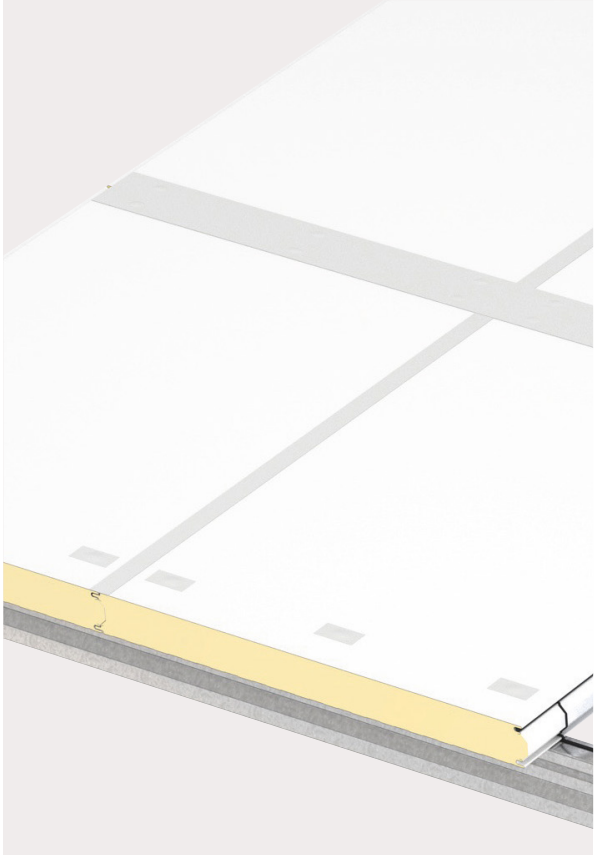

3. Sealants and Joint Integrity

- Apply neutral-cure, gun-grade sealant to all specified locations unless otherwise directed.
- Confirm that all sealants are compatible with project-specific environmental and durability requirements.

4. Panel Engagement and Alignment

- Ensure the arrows displayed on the insulation core are oriented upwards, as they indicate the external panel face.
- Pull joints tight and fully engage each panel to ensure correct alignment. Use panel clamps where required.
- Ensure insulation to insulation contact is achieved at all panel joints.
- Maintain tight panel-to-panel joint compression during installation to ensure joint integrity and air-tightness.
- Use vacuum tensioning kits with flat-profile panels only.

5. Membrane and Waterproofing Responsibility

- The K-PIR™ Roofliner system is designed to be used with a single-ply membrane, KingZip or a third party roofing system installed over the external face.
- The design, supply, and installation of the third party roofing system are not provided by Kingspan and must be managed by the project team.
- The roof is not considered fully watertight until the waterproofing membrane or roof cladding system has been installed and sealed per the relevant manufacturers installation details.

6. Handling, Protection, and Site Practices

- Use mechanical lifting equipment for panel movement and placement. Manual lifting or improvised handling methods are not permitted.
- Remove all protective film from the external weather face and internal liner prior to installation.
- Do not use pump trucks or small-wheeled trolleys on installed panels. These will cause localised crushing of the panel skin and core.

Technical Support and Project-Specific Guidance

For non-standard conditions or if clarification is required, contact Kingspan Technical Services. This includes, but is not limited to:

- Internal air sealing strategies
- High-humidity or hygiene-sensitive internal environments
- Project-specific installation details or deviations from standard methods
- Kingspan Technical Services can provide tailored advice to ensure compliance, durability, and correct system performance.

Steps 1 to 3

This section outlines the standard installation steps for the K-PIR™ Roofliner Panel (KS1100/1200RL) that need to be followed in order. Additional steps, detailing, sealants, fixings etc. may be required depending on project-specific requirements, load conditions, and/or environmental factors. Always refer to approved construction drawings and consult Kingspan Technical Support if in doubt.

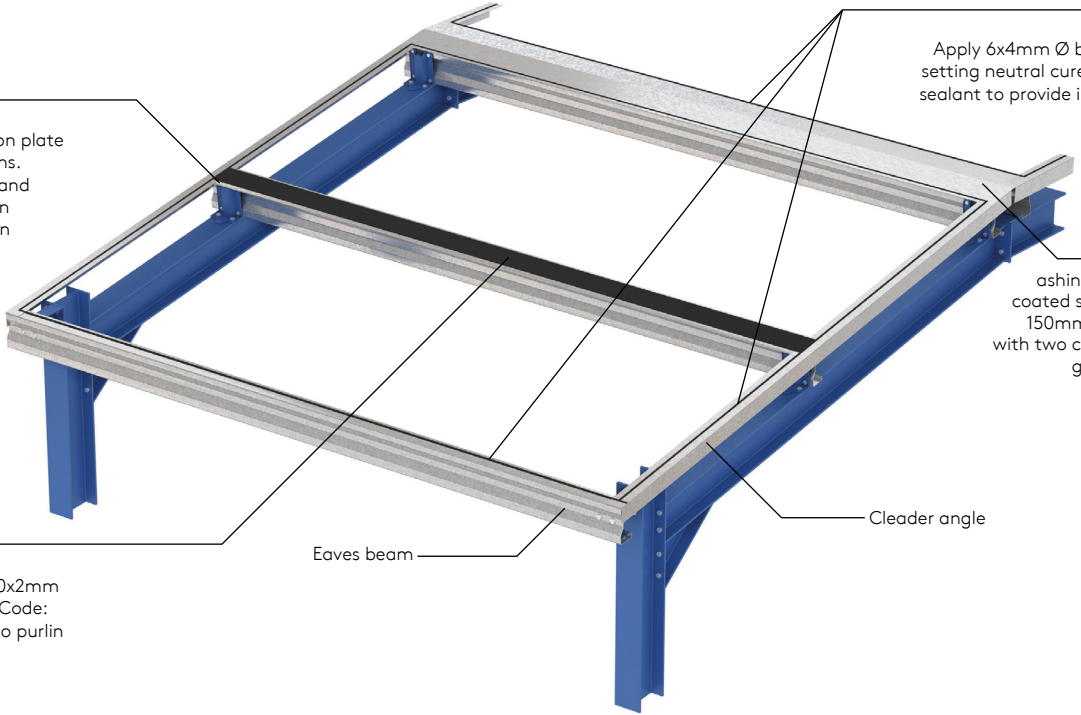

Fastener Locations

Fastener Layouts

Panel Ends / Intermediate

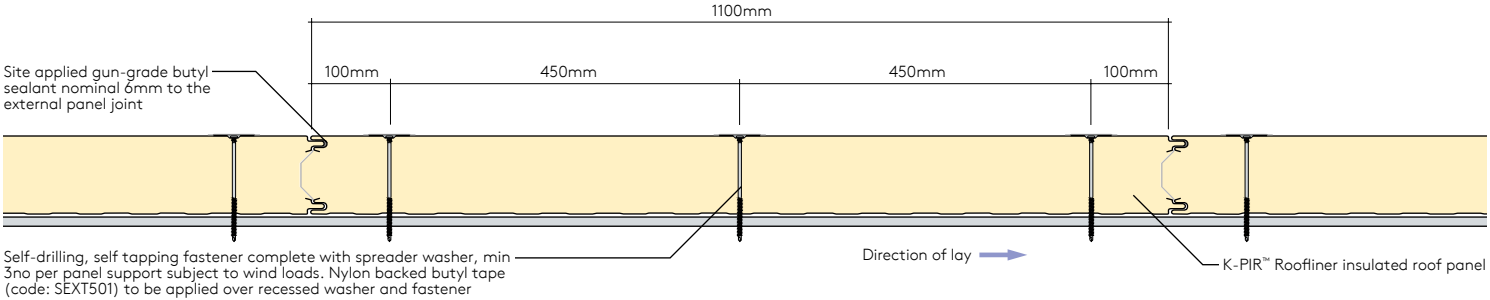

Panel End Joint

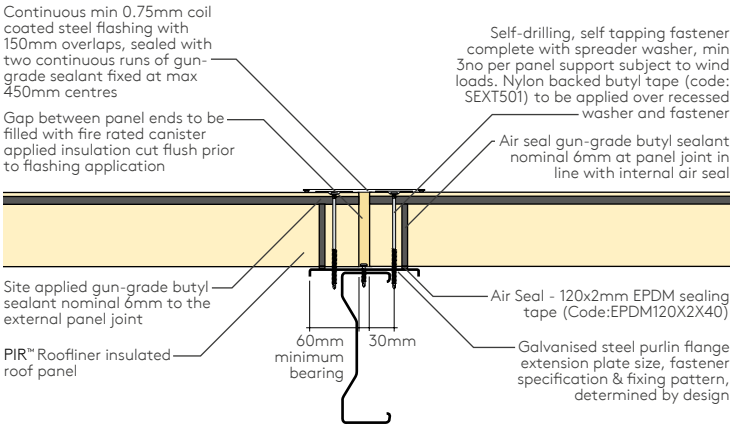

Intermediate

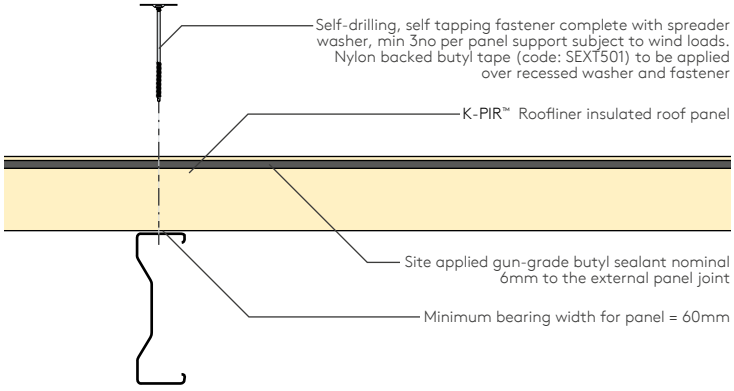

Step 4

4

Locate first panel (**P1**) ensuring it is bearing evenly on the galvanised extension plate (Minimum overall panel bearing is 120mm).

Fix panel (**P1**) with 3No. primary fasteners with recessed washer per purlin (minimum) subject to wind loadings.

Note: Coring of the external panel face will be required when using recessed washer



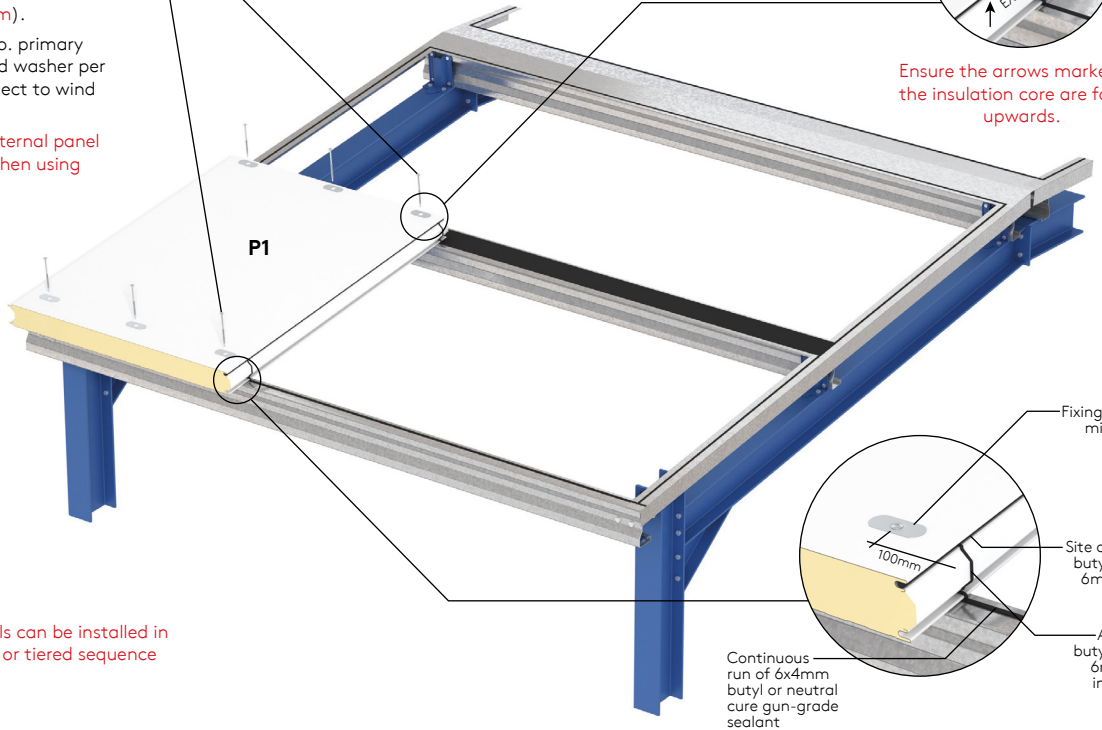

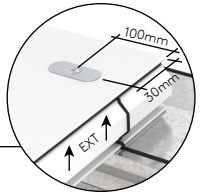

Ensure the arrows marked on the insulation core are facing upwards.

Note: Panels can be installed in a coursed or tiered sequence

Fixings to be positioned minimum 100mm in from panel joints

Site applied gun-grade butyl sealant nominal 6mm to the external panel joint

Air seal gun-grade butyl sealant nominal 6mm at panel joint in line with internal air seal

Continuous run of 6x4mm butyl or neutral cure gun-grade sealant

Steps 5 to 7

5

Lay second panel (**P2**) ensuring it is bearing evenly on the galvanised extension plate (Minimum overall panel bearing is 120mm). Panel butt joint should be approx. 10mm.

Fix panel (**P2**) with 3No. primary fasteners with 40mm Ø s/steel spreader plate, per purlin (minimum) subject to wind loadings

6

Apply 6mm Ø continuous non-setting neutral cure gun-grade butyl air seal to the exterior side lap and panel side joint in-line with previous installed eaves and ridge air seal

7

Apply 6mm Ø non-setting neutral cure gun-grade butyl air seal to each panel side joint inline with each run of previously installed 120 x 2mm EPDM sealing tape (Code: EPDM 120X2X40M)

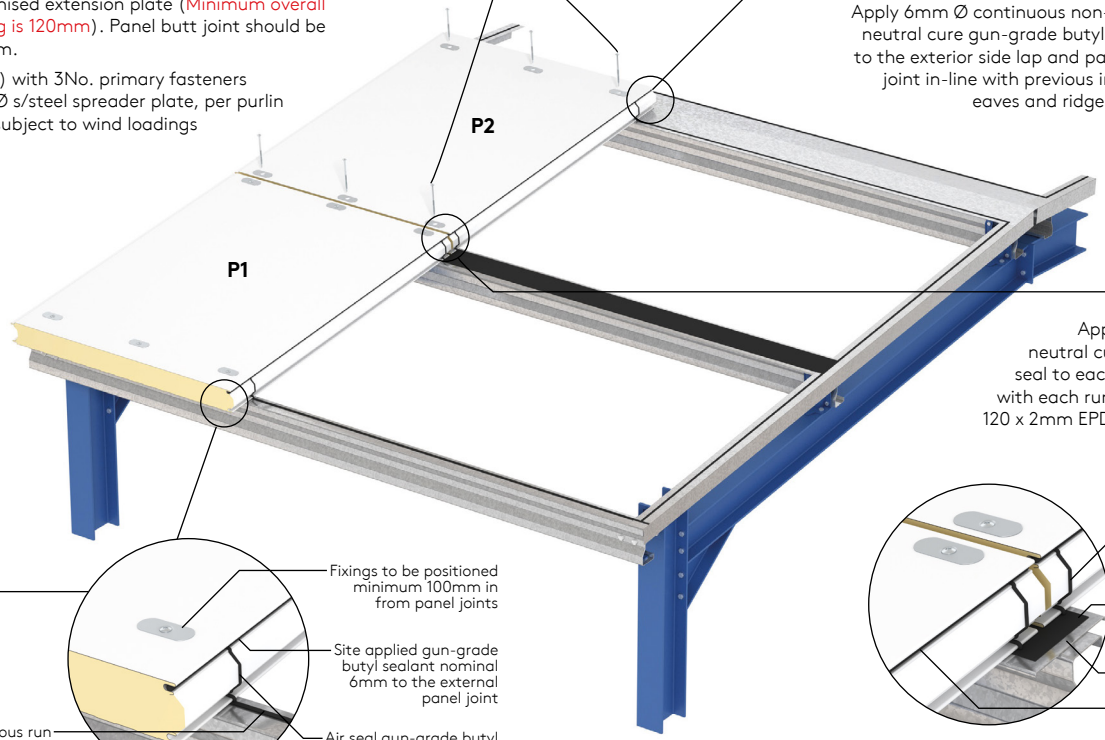

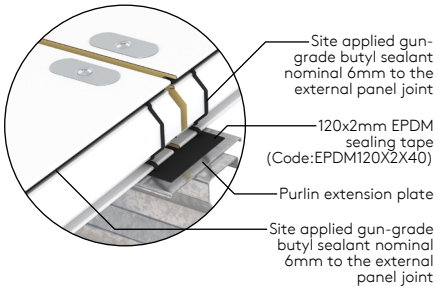

Step 8

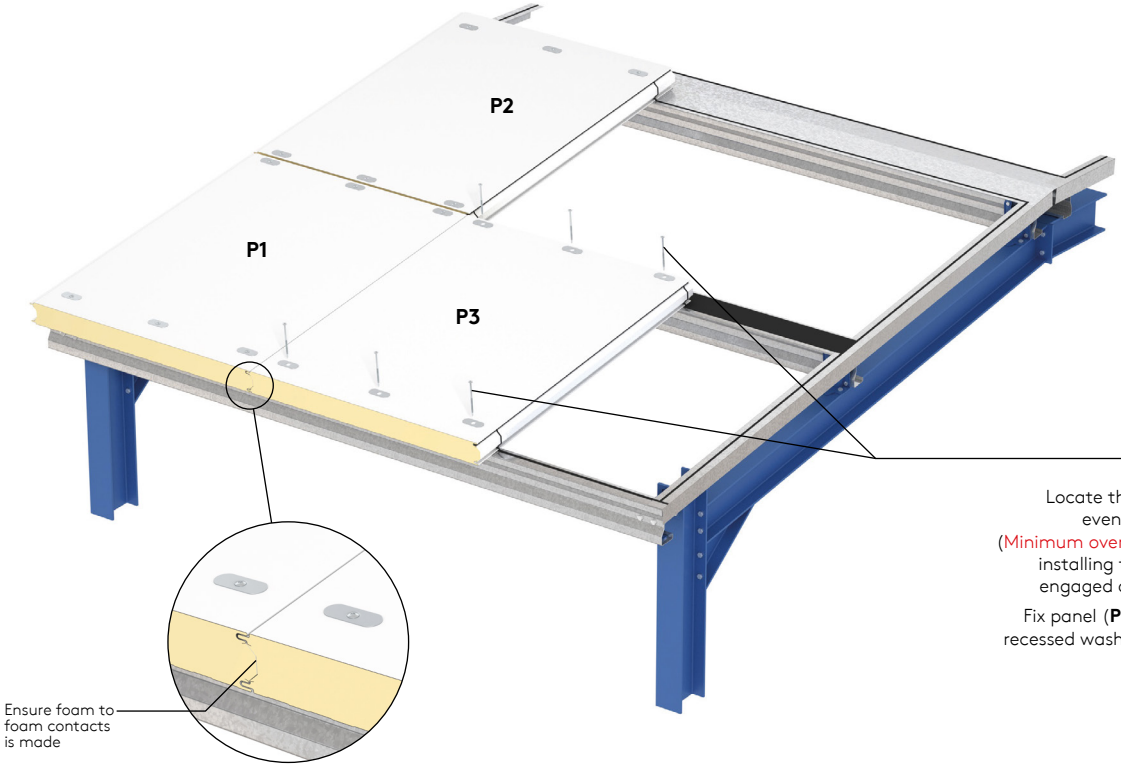

8

Locate third panel (**P3**) ensuring it is bearing evenly on the galvanised extension plate (Minimum overall panel bearing is 120mm). Before installing the fasteners ensure panels are fully engaged and foam to foam contact is made.

Fix panel (**P3**) with 3No. primary fasteners with recessed washer, per purlin (minimum) subject to wind loadings

Steps 9 to 10

10

10mm gap between panel ends to be filled using fire rated canister foam and cut flush prior to installing joint cover flashing

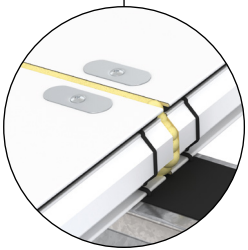

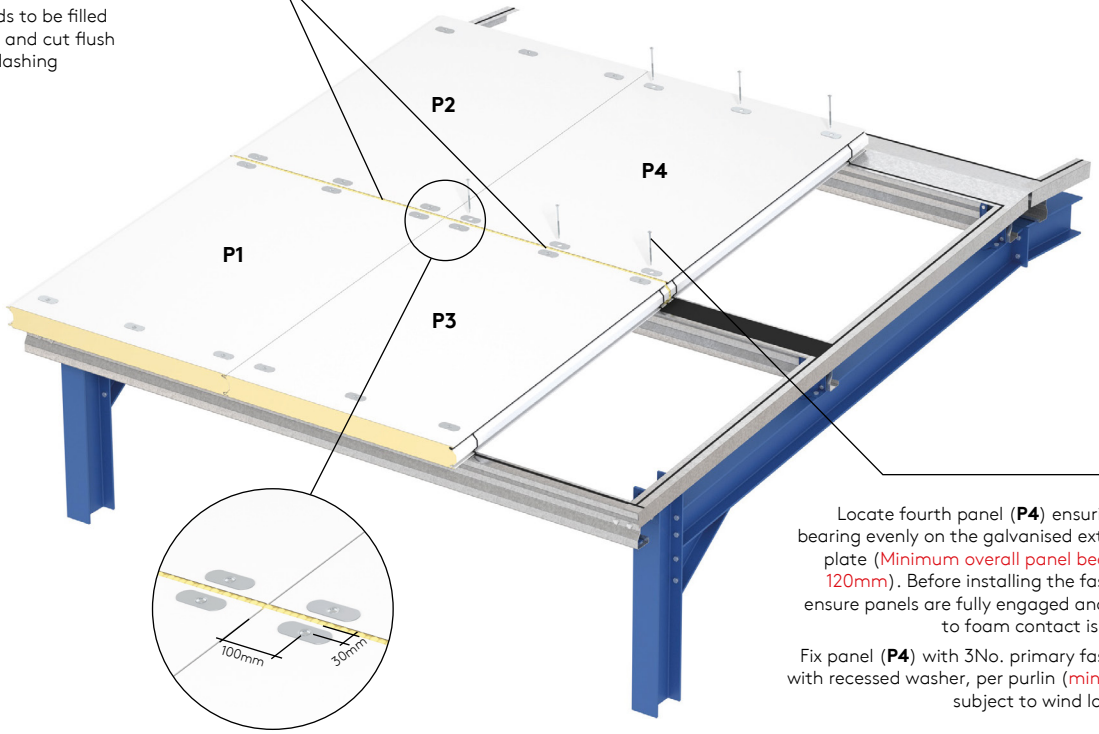

9

Locate fourth panel (**P4**) ensuring it is bearing evenly on the galvanised extension plate (Minimum overall panel bearing is 120mm). Before installing the fasteners ensure panels are fully engaged and foam to foam contact is made.

Fix panel (**P4**) with 3No. primary fasteners with recessed washer, per purlin (minimum) subject to wind loadings

Steps 11 to 12

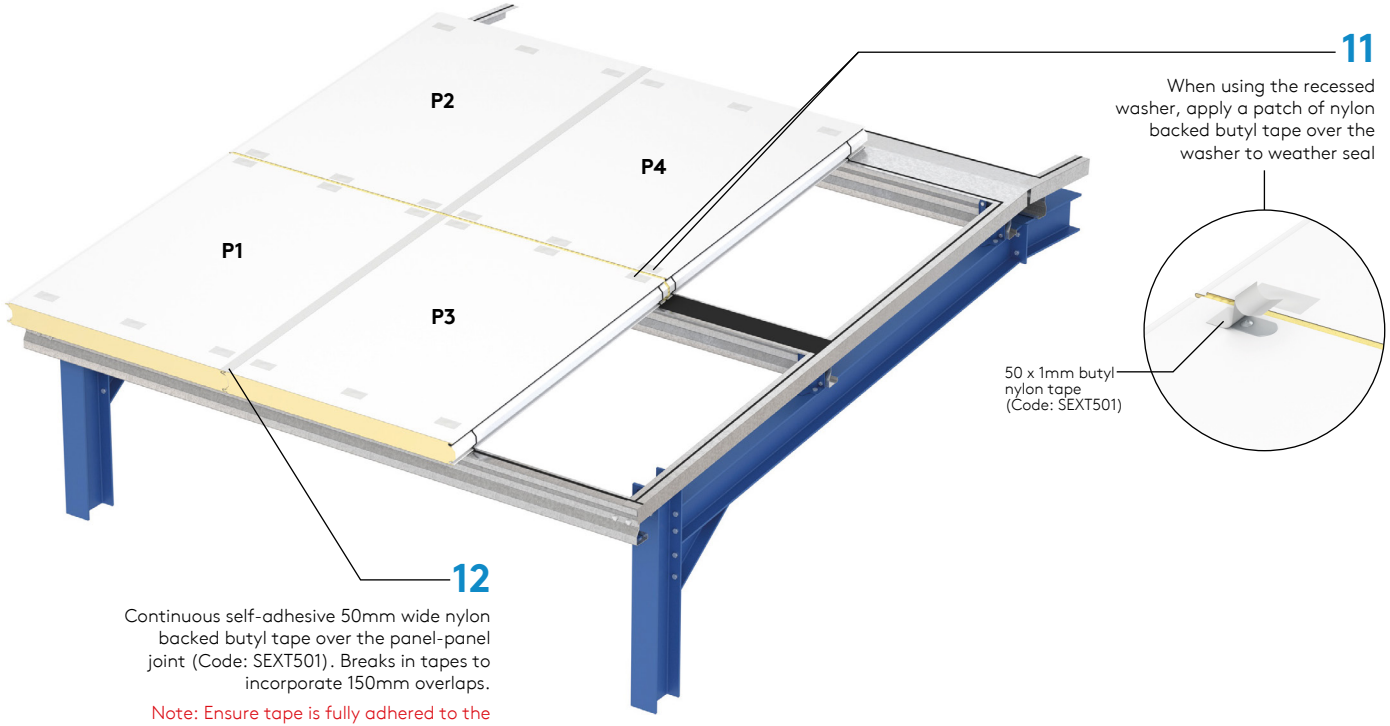

Steps 13

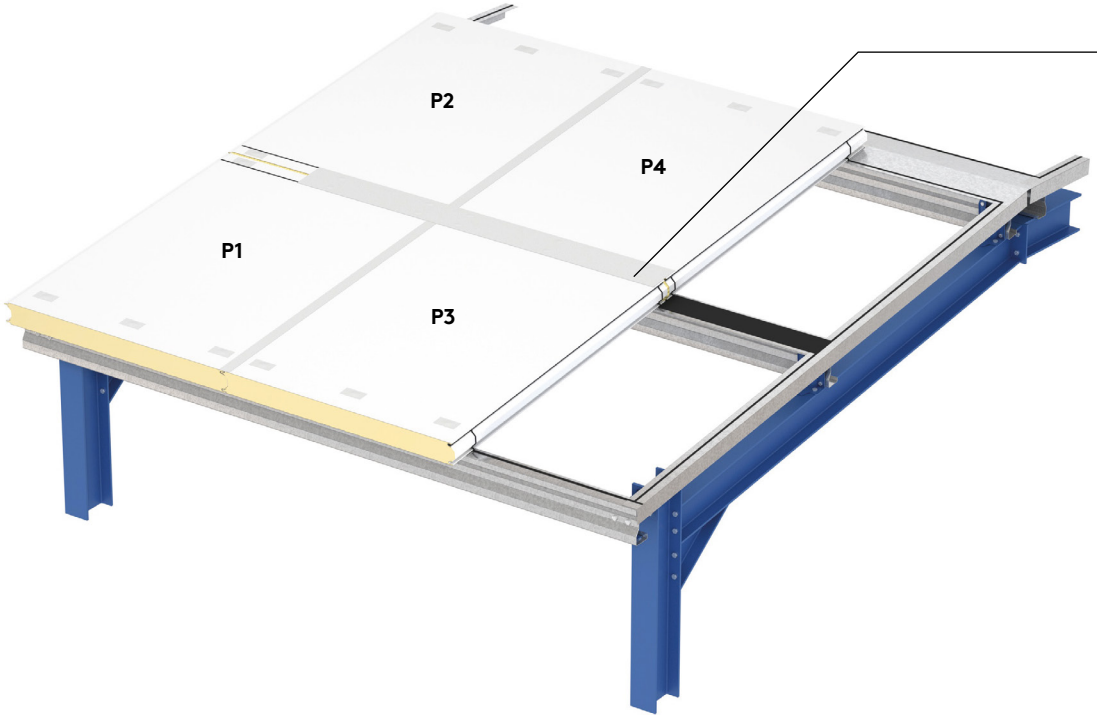

13

Apply continuous Min. 0.75mm coil coated steel flashing with 150mm overlaps, sealed with two continuous runs of gun-grade sealant fixed at Max. 450mm centres

Final Installation

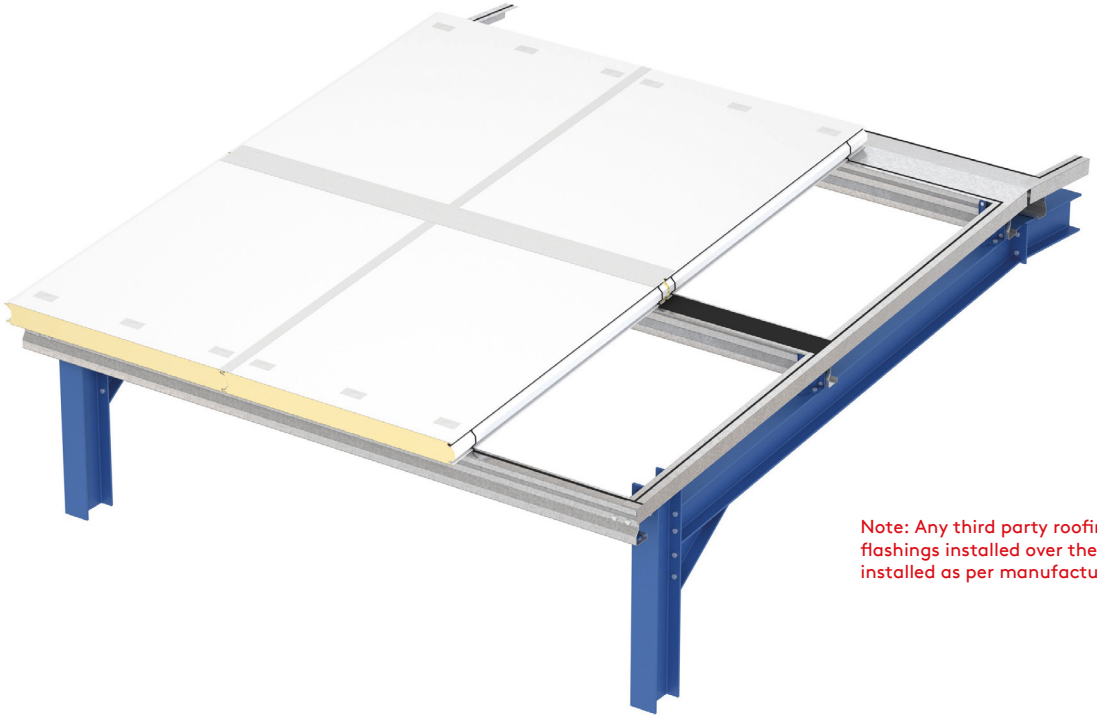

Note: Any third party roofing system & flashings installed over the Roofliner to be installed as per manufactures guidelines

Panel Handling

Appropriate personnel protective equipment should always be worn to avoid cuts and abrasions to installers and panels.
Individual panels should always be lifted from a pack and not dragged over others.
The weight of individual panels for lifting can be determined from the information on the packing slip.
For larger panels the contractor would normally arrange to use appropriate material installation equipment to help lift the panels into position.

Protecting Film
When panels are supplied with a plastic protective film this should be removed during site installation.

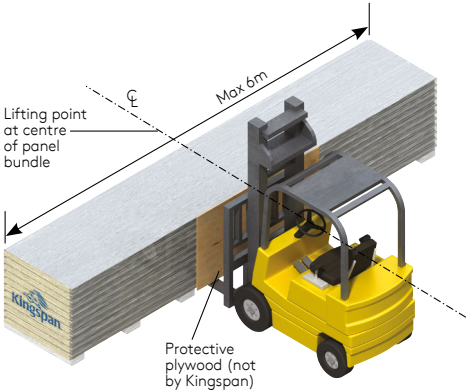

The recommended loading / unloading method for bundles less than or equal to 6m is to use a single forklift with widely spaced forks placed under the centre of the bundle as shown.

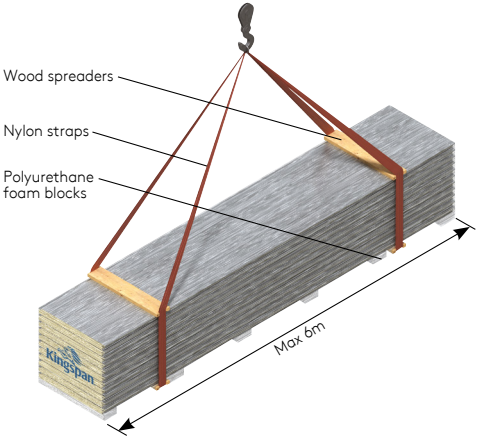

The recommended lifting method for bundles no more than or equal to 6m can be handled with a crane by using nylon straps and wood spreaders as shown.

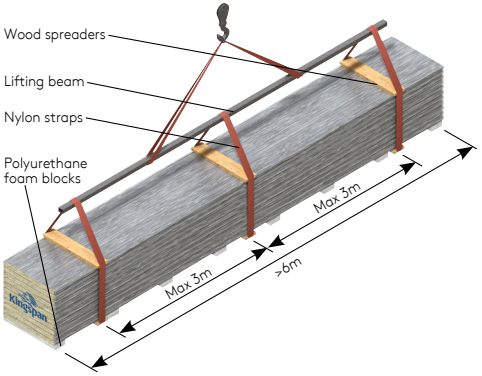

The recommended lifting method for bundles more than 6m, by crane, is by using three points of support. To prevent damage from nylon straps, use wood spreaders at top and bottom at lifting locations as shown.

For illustration purposes only

Panel Handling - Correct and Incorrect Panel Handling

Caution

Individual panels should never be moved in a flat position as excessive flexing may result. Excessive flexing ruptures a panel's core, permanently distorts the facings and may lead to thermal blistering. When moving a panel, it must be turned on its edge first, then supported at each end with as many men as necessary to safely handle.

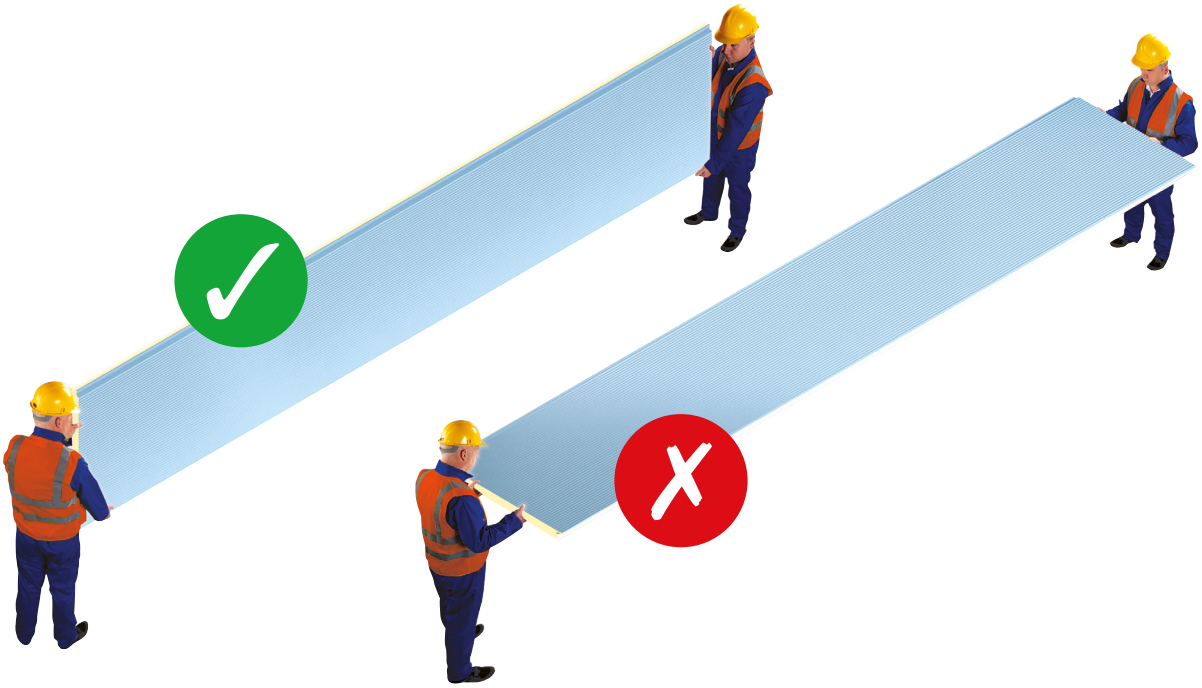

Installation guides are available for most of Kingspan insulated roof and wall panels.
For the most up to date version of this Installation guide please scan the QR code below or please call Kingspan on:

AUS: +61 2 8889 3000
www.kingspanpanels.com.au

For the most up-to-date version of this document please scan or click here.

For the product offering in other markets please contact your local sales representative or visit www.kingspanpanels.com

Care has been taken to ensure that the contents of this publication are accurate, but Kingspan Insulated Panels and its subsidiary companies do not accept responsibility for errors or for information that is found to be misleading. Suggestions for, or description of, the end use or application of products or methods of working are for information only and Kingspan Insulated Panels and its subsidiaries accept no liability in respect thereof.

Third Issue : 29/09/2026