Kingspan Insulated Panels
Australia

K-PIR™ Architectural Panel Installation Guide

Vertically Laid









Formerly known as Architectural Wall Panel

Why the change?
As part of our new K-PIR™ product branding, this product has been renamed. Only the name has changed, the product remains the same.

K-PIR™

Kingspan®

Third Issue | 23/09/2026

Components: K-PIR™ Architectural Wall Panel (KS900/1000AWP)
External profile: Micro-Rib, Mini-Micro, Wave
Internal profile: Rib25



Primary / main fastener with washer
(Carbon Steel)
(Not by Kingspan)

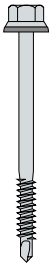

Secondary / Stitching screw with washer
(Carbon Steel)
(Not by Kingspan)



Low profile fastener
(Carbon Steel)
(Not by Kingspan)



Galvanised ledger angle



PIR insulation
(Not by Kingspan)



Continuous base support angle

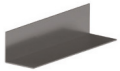

Drip flashing



External corner flashing



Panel clamp
(Not by Kingspan)

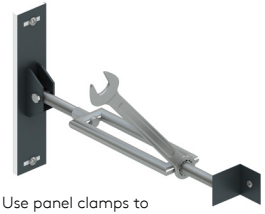

Use panel clamps to ensure full engagement of panel joint when required

AWP filler
(Code: 3FILL)



Optional Kingspan 3-4-5 hole spreader washer
(Code: 3HSW, 4HSW, 5HSW)



Neutral cure gun-grade sealant
(Not by Kingspan)



Fire rated canister foam
(Not by Kingspan)



Butyl tape sealant
(Code: SEXT)



6x4mm

Although this 'installation guide' is deemed to be correct at the time of publication, Kingspan reserve the right to amend the information at any time in the future.

Important Installation Notes

Reference Documents and Scope

- This guide provides general installation guidance and must be used in conjunction with project-specific construction drawings, specifications, and method statements.
- While this is the standard installation guide for K-PIR™ Architectural Wall Panel (KS900/1000AWP), project specific detailing always takes precedence. Confirm all details against approved project documentation.

1. Substrate Preparation and Pre-Installation Checks

- Ensure all **steelwork is correctly aligned, levelled, and within tolerance** before panel installation begins.
- Do not proceed with installation if structural alignment issues are identified.
- The minimum bearing face for intermediate support is 60mm.
- The support must provide a full bearing surface for the panel.

2. Fasteners and Fixings

- Use only minimum **Class 4 carbon steel primary fasteners**. Confirm suitability of thread type and drill tip for the structural material. Refer to fastener supplier/ manufacturers information, seeking guidance from them directly if required.
- Fastener quantity must be determined by the project engineer based on span and loads.
- Optional pre-punched spreader washers may be used to improve structural spans where fastener capacity is the limiting factor. Contact Kingspan for advice
- Note that the **wind loads must be confirmed by the project engineer** as Kingspan is not responsible for the wind analysis.
- Set all fasteners using **manufacturer-recommended drill speed and torque**, with the correct socket and drive bit. Use a **depth-limiting nose piece** where applicable.
- Remove all **swarf immediate**ly during drilling to prevent corrosion and surface damage.

3. Sealants and Joint Integrity

- Apply neutral-cure, gun-grade sealant to all specified locations unless otherwise directed.
- Confirm that all sealants are compatible with project-specific environmental and durability requirements.

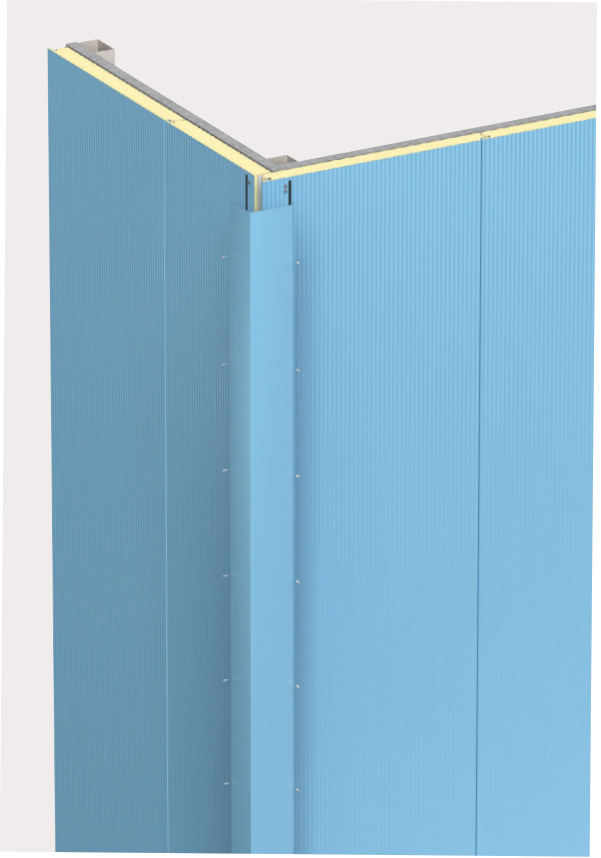

4. Installation Sequence

- The panels are laid horizontally from base to top. The panels cannot be back laid.

5. Panel Engagement and Alignment

- Ensure panel ledger angle is accurately lined and levelled.
- Locate panels on ledger angle ensuring panel is correctly positioned.
- Pull joints tight and fully engage each panel to ensure correct alignment.
- Ensure insulation to insulation contact is achieved at all panel joints
- Maintain tight panel-to-panel joint compression during installation to ensure joint integrity and air-tightness.

6. Handling, Protection, and Site Practices

- Use mechanical lifting equipment for panel movement and placement. Manual lifting or improvised handling methods are not permitted.
- Remove all protective film from the external weather face and internal liner prior to installation.
- Penetrations larger than 300mm x 300mm must be framed out with structural steel.

Technical Support and Project-Specific Guidance

For non-standard conditions or if clarification is required, contact Kingspan Technical Services. This includes, but is not limited to:

- Internal air sealing strategies
- High-humidity or hygiene-sensitive internal environments
- Project-specific installation details or deviations from standard methods
- Kingspan Technical Services can provide tailored advice to ensure compliance, durability, and correct system performance.

Steps 1 to 2

This section outlines the standard installation steps for the vertically laid K-PIR™ Architectural Wall Panel (KS900/1000AWP) that need to be followed in order. Additional steps, detailing, sealants, fixings etc. may be required depending on project-specific requirements, load conditions, and/or environmental factors. Always refer to approved construction drawings and consult Kingspan Technical Support if in doubt.

1

Line, Level, fix and seal continuous base support angle to structure. Ensure Joints in base support angle are sealed. Apply 6x4mm butyl sealant or neutral cure gun-grade sealant to the front face of the continuous base support angle

2

Line, level and fix drip flashing using low profile fasteners. Joints in the drip flashing to incorporate butt straps sealed with two runs of neutral cure gun-grade sealant

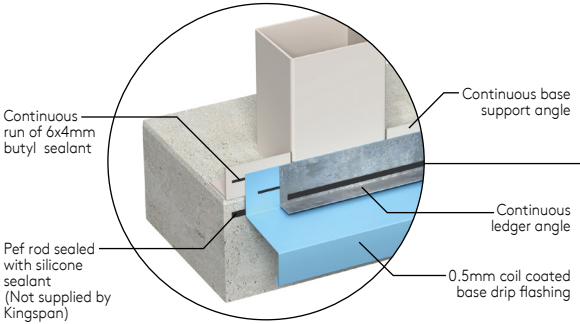



Note: Ensure steelwork is suitable for panels and is within tolerance Min. bearing face for intermediate support is 60mm

Steps 3 to 4

3

Apply 6x4mm butyl sealant or neutral cure gun-grade sealant to drip flashing and head detail to provide perimeter air seal

4

Fix the Continuous ledger angle, through the drip flashing and into the continuous base support angle, with low profile fasteners. The ledger angle will help to keep the panels plumb and prevent sawtooth effect at the base



Note: Ensure steelwork is suitable for panels and is within tolerance Min. bearing face for intermediate support is 60mm

Steps 5 to 9

5

Install internal corner flashing or galvanised support with low profile fasteners

6

Apply 6x4mm butyl sealant or neutral cure gun-grade sealant to corner flashingto connect with previously installed perimeter air sealants applied to dripflashing and head detail

7

Locate first panel (**P1**) ensuring it is correctly positioned lined and levelled ensuring a minimum of 6mm gap between the external edge of the panel and drip flashing

9

At corner positions through fix min. 2No. main fasteners into female panel joint at each horizontal rail location

Note: Main fasteners to be suitably located to ensure they are covered by external corner flashing

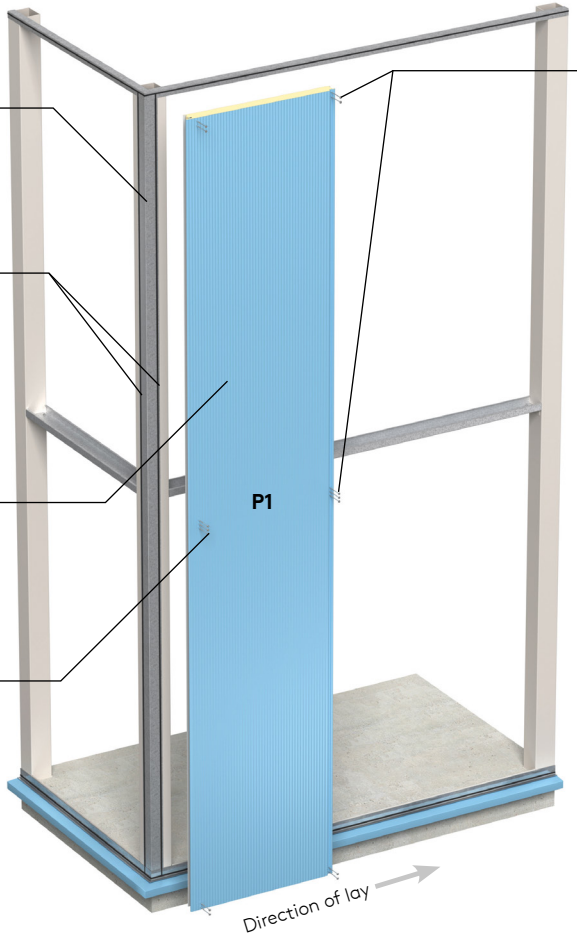

8

Install primary fasteners through the male joint at the top and bottom, and primary fasteners at intermediate locations

Note: Installations may require additional fasteners depending on wind loadings/specification. Check project specific details

Alternative Method

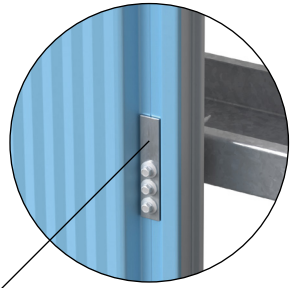

Optional
3, 4, or 5 hole pre-punched spreader washers may be used to improve structural spans where fastener capacity is the limiting factor. Sufficient steel bearing to be provided 3no washer requires min 60mm, 4no washer requires min 70mm, 5no washer requires min 90mm. Contact Kingspan for advice

Steps 10 to 13

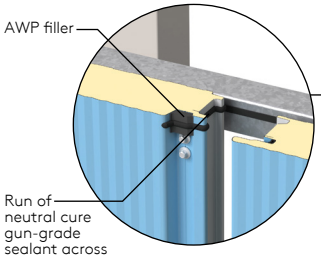

11

Install AWP filler at top of panel only, apply a neutral cure gun-grade sealant across male joint ensuring it meets previously installed air seal

Note: Position of AWP filler at top of panel only

13

Repeat processes **10** to **12** to complete elevation

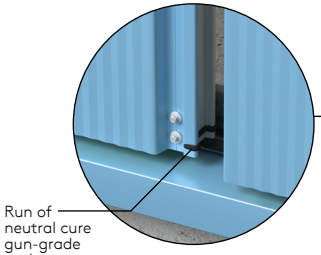

10

Apply a neutral cure gun-grade sealant across male joint ensuring it meets previously installed air seal

Note: Do not apply AWP filler

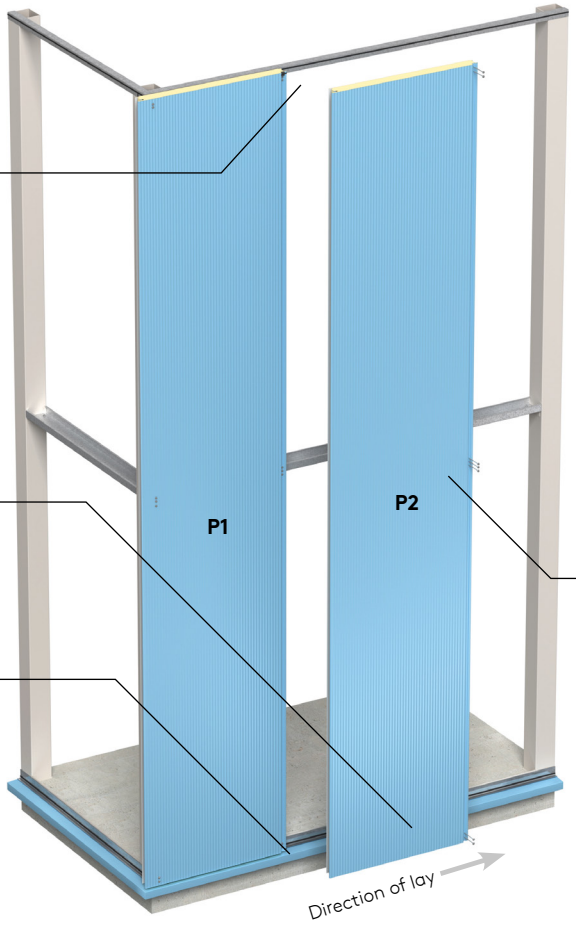

12

Locate next panel (**P2**) into position ensuring that the factory applied weather seal is compressed and that the AWP filler remains in position. Ensure panel is lined and levelled correctly in line with adjacent panel and fix as per item **8**

Steps 14

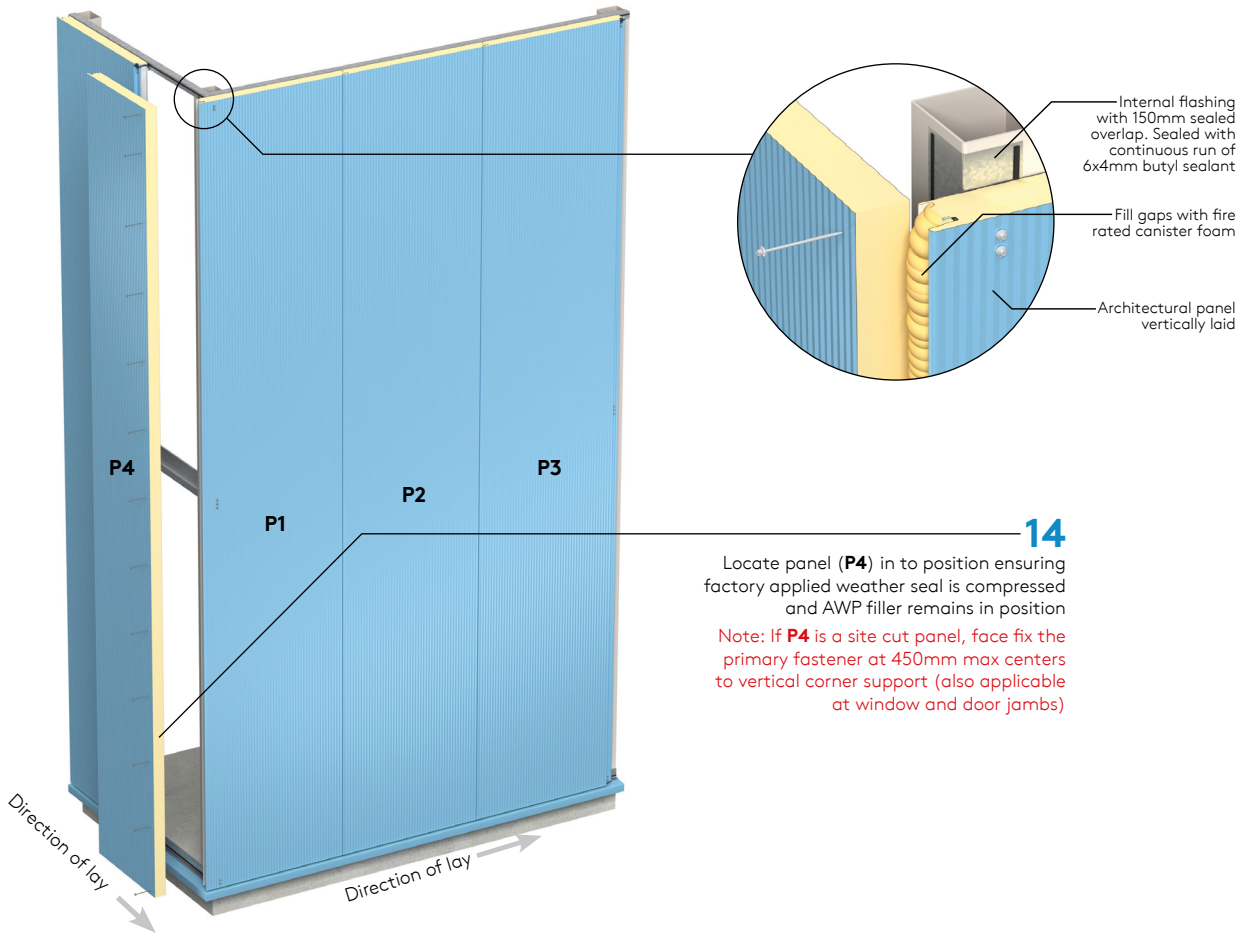

14

Locate panel (**P4**) in to position ensuring factory applied weather seal is compressed and AWP filler remains in position

Note: If **P4** is a site cut panel, face fix the primary fastener at 450mm max centers to vertical corner support (also applicable at window and door jambs)

Steps 15

15
Fix external corner flashing with stitching screws at max. 450mm centres

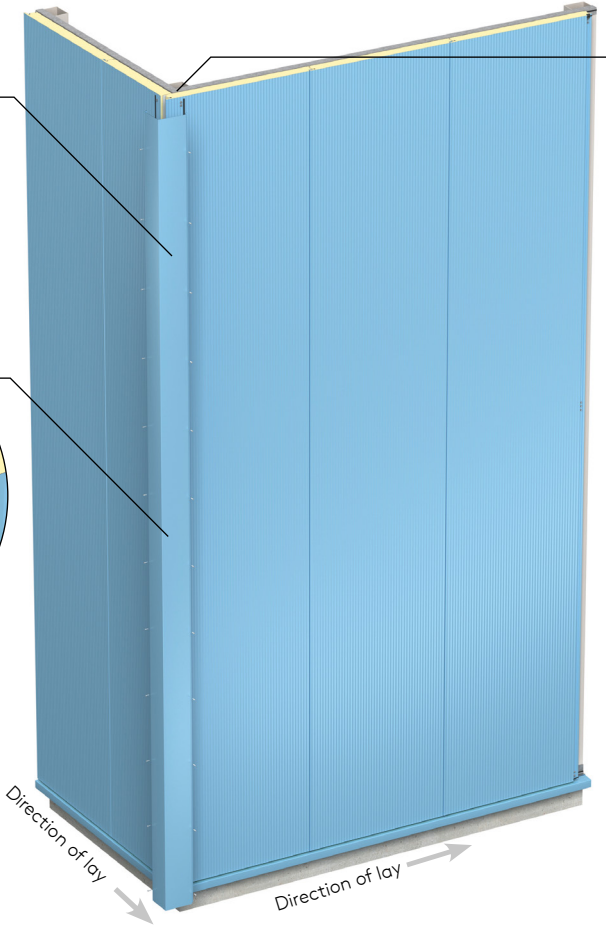

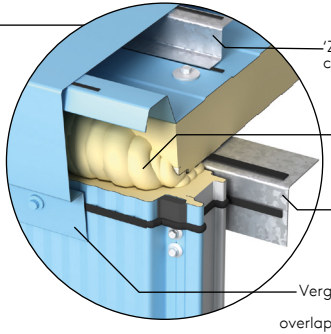

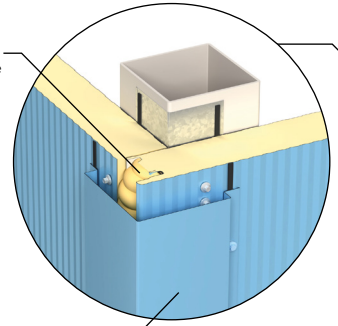

Panel Stack Joint

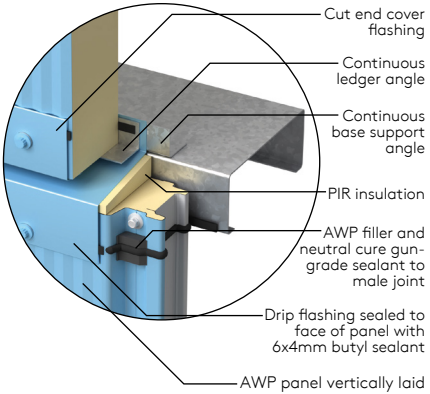

Panel Handling

Appropriate personnel protective equipment should always be worn to avoid cuts and abrasions to installers and panels.
Individual panels should always be lifted from a pack and not dragged over others.
The weight of individual panels for lifting can be determined from the information on the packing slip.
For larger panels the contractor would normally arrange to use appropriate material installation equipment to help lift the panels into position.

Protecting Film
When panels are supplied with a plastic protective film this should be removed during site installation.

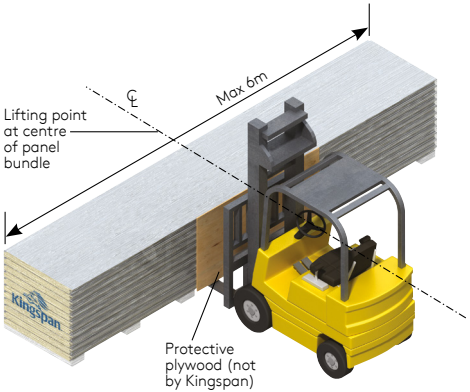

The recommended loading / unloading method for bundles less than or equal to 6m is to use a single forklift with widely spaced forks placed under the centre of the bundle as shown.

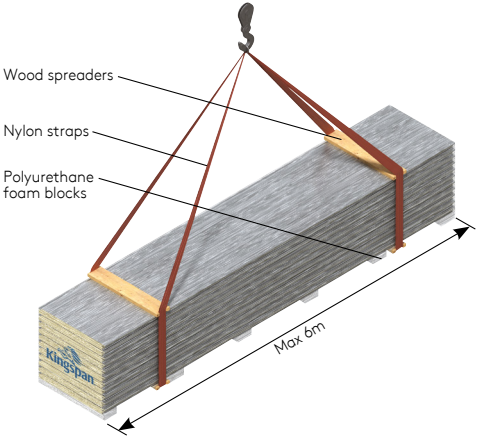

The recommended lifting method for bundles no more than or equal to 6m can be handled with a crane by using nylon straps and wood spreaders as shown.

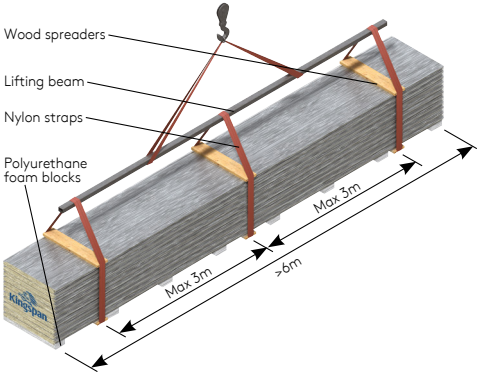

The recommended lifting method for bundles more than 6m, by crane, is by using three points of support. To prevent damage from nylon straps, use wood spreaders at top and bottom at lifting locations as shown.

For illustration purposes only

Panel Handling - Correct and Incorrect Panel Handling

Caution

Individual panels should never be moved in a flat position as excessive flexing may result. Excessive flexing ruptures a panel's core, permanently distorts the facings and may lead to thermal blistering. When moving a panel, it must be turned on its edge first, then supported at each end with as many men as necessary to safely handle.

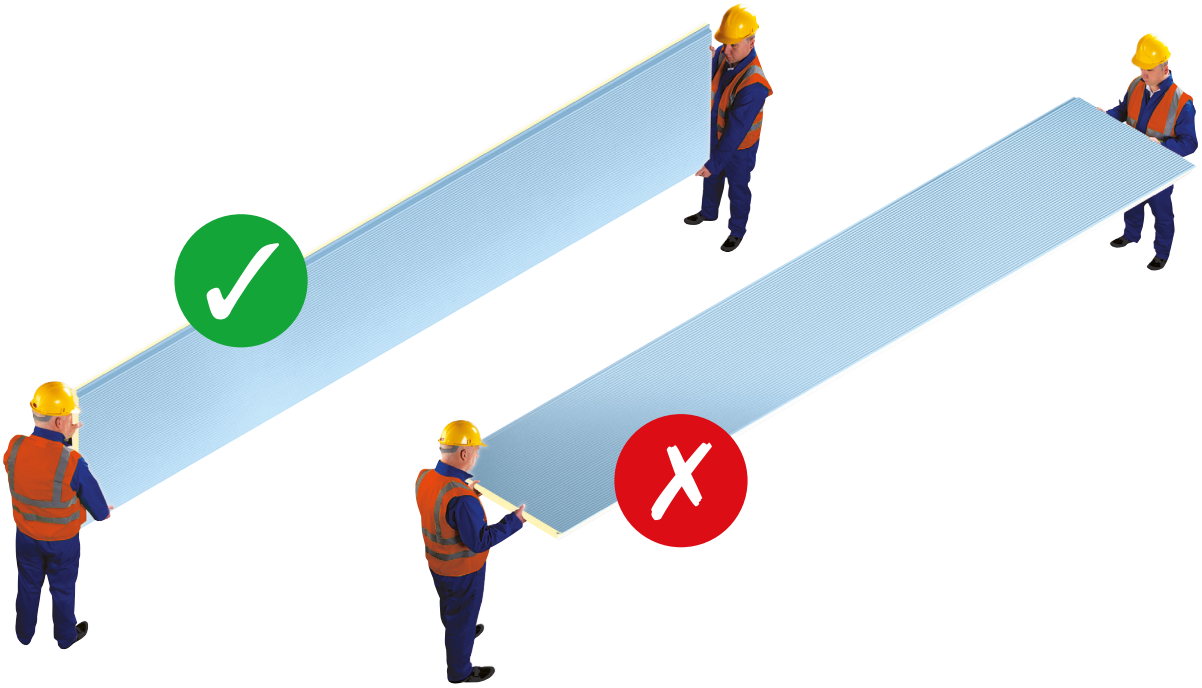

Notes

Notes

Notes

Installation guides are available for most of Kingspan insulated roof and wall panels.
For the most up to date version of this Installation guide please scan the QR code below or please call Kingspan on:

AUS: +61 2 8889 3000
www.panels.kingspan.com/en-au

For the most up-to-date version of this document please scan or click here.

For the product offering in other markets please contact your local sales representative or visit www.kingspanpanels.com

Care has been taken to ensure that the contents of this publication are accurate, but Kingspan Insulated Panels and its subsidiary companies do not accept responsibility for errors or for information that is found to be misleading. Suggestions for, or description of, the end use or application of products or methods of working are for information only and Kingspan Insulated Panels and its subsidiaries accept no liability in respect thereof.

Third Issue | 23/09/2026