Kingspan Insulated Panels
Australia

K-PIR™ Architectural Panel Installation Guide



Horizontally Laid

Formerly known as Architectural Wall Panel

Why the change?
As part of our new K-PIR™ product branding, this product has been renamed. Only the name has changed, the product remains the same.

K-PIR™

Kingspan®

Third Issue | 23/09/2026

Components: K-PIR™ Architectural Wall Panel (KS900/1000AWP)
External profile: Micro-Rib, Mini-Micro, Wave
Internal profile: Rib25



Primary / main fastener with washer
(Carbon Steel)
(Not by Kingspan)

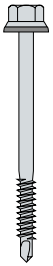

Low profile fastener
(Carbon Steel)
(Not by Kingspan)



Galvanised ledger angle



Drip flashing



Panel clamp
(Not by Kingspan)

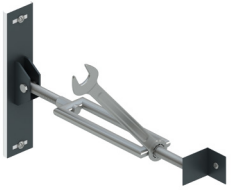

Use panel clamps to ensure full engagement of panel joint when required

Top hat
(Code: TOPHATA)



Top hat insert
(Code: TOPHATINF)



VJ2 EPDM bubble gasket
(Code: VJ2)

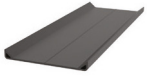

Panel bearer
(Code: PB50/80/100)



PIR insulation
(Not by Kingspan)



AWP filler
(Code: 3FILL)



Butt strap
(Code: AWPBS)



Optional Kingspan 3-4-5 hole spreader washer
(Code: 3HSW, 4HSW, 5HSW)



Fire rated canister foam
(Not by Kingspan)



Neutral cure gun-grade sealant
(Not by Kingspan)



Butyl tape sealant
(Code: SEXT)



Although this 'installation guide' is deemed to be correct at the time of publication, Kingspan reserve the right to amend the information at any time in the future.

Important Installation Notes

Reference Documents and Scope

- This guide provides general installation guidance and must be used in conjunction with project-specific construction drawings, specifications, and method statements.
- While this is the standard installation guide for K-PIR™ Architectural Wall Panel (KS900/1000AWP), project specific detailing always takes precedence. Confirm all details against approved project documentation.

1. Substrate Preparation and Pre-Installation Checks

- Ensure all **steelwork is correctly aligned, levelled, and within tolerance** before panel installation begins.
- Do not proceed with installation if structural alignment issues are identified.
- The minimum bearing face for intermediate support is 60mm.
- The support must provide a full bearing surface for the panel.

2. Fasteners and Fixings

- Use only minimum **Class 4 carbon steel primary fasteners**. Confirm suitability of thread type and drill tip for the structural material. Refer to fastener supplier/ manufacturers information, seeking guidance from them directly if required.
- Fastener quantity must be determined by the project engineer based on span and loads.
- Optional pre-punched spreader washers may be used to improve structural spans where fastener capacity is the limiting factor. Contact Kingspan for advice.
- Note that the **wind loads must be confirmed by the project engineer** as Kingspan is not responsible for the wind analysis.
- Set all fasteners using **manufacturer-recommended drill speed and torque**, with the correct socket and drive bit. Use a **depth-limiting nose piece** where applicable.
- Remove all **swarf immediate**ly during drilling to prevent corrosion and surface damage.

3. Sealants and Joint Integrity

- Apply neutral-cure, gun-grade sealant to all specified locations unless otherwise directed.
- Confirm that all sealants are compatible with project-specific environmental and durability requirements.

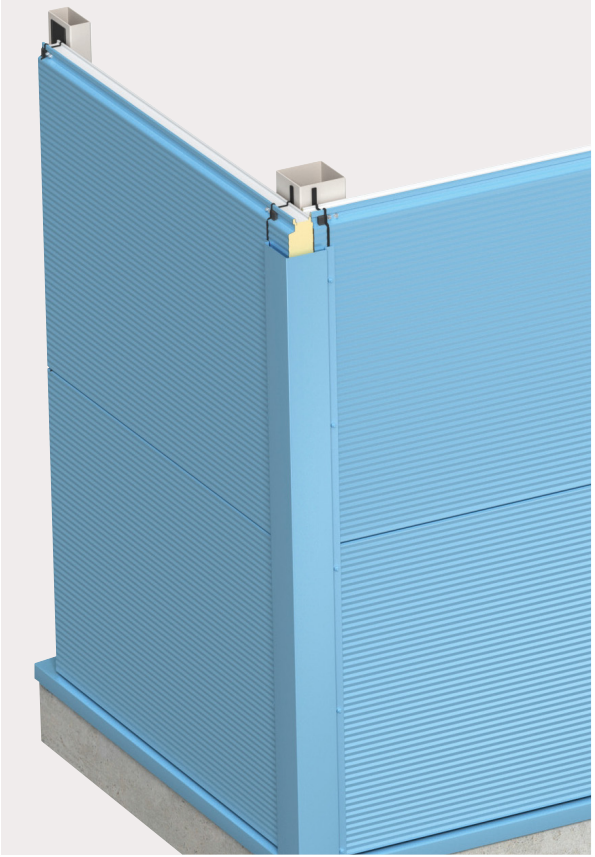

Important Installation Notes

4. Installation Sequence

- The panels are laid horizontally from base to top. The panels cannot be back laid.

5. Panel Engagement and Alignment

- Ensure panel bearers are accurately lined and levelled.
- Locate panels on panel bearers ensuring panel is correctly positioned.
- Pull joints tight and fully engage each panel to ensure correct alignment.
- Ensure insulation to insulation contact is achieved at all panel joints
- Maintain tight panel-to-panel joint compression during installation to ensure joint integrity and air-tightness.

6. Handling, Protection, and Site Practices

- Use mechanical lifting equipment for panel movement and placement. Manual lifting or improvised handling methods are not permitted.
- Remove all protective film from the external weather face and internal liner prior to installation.
- Penetrations larger than 300mm x 300mm must be framed out with structural steel.

Technical Support and Project-Specific Guidance

For non-standard conditions or if clarification is required, contact Kingspan Technical Services. This includes, but is not limited to:

- Internal air sealing strategies
- High-humidity or hygiene-sensitive internal environments
- Project-specific installation details or deviations from standard methods
- Kingspan Technical Services can provide tailored advice to ensure compliance, durability, and correct system performance.

Steps 1 to 4

This section outlines the standard installation steps for the horizontally laid K-PIR™ Architectural Wall Panel (KS900/1000AWP) that need to be followed in order. Additional steps, detailing, sealants, fixings etc. may be required depending on project-specific requirements, load conditions, and/or environmental factors. Always refer to approved construction drawings and consult Kingspan Technical Support if in doubt.

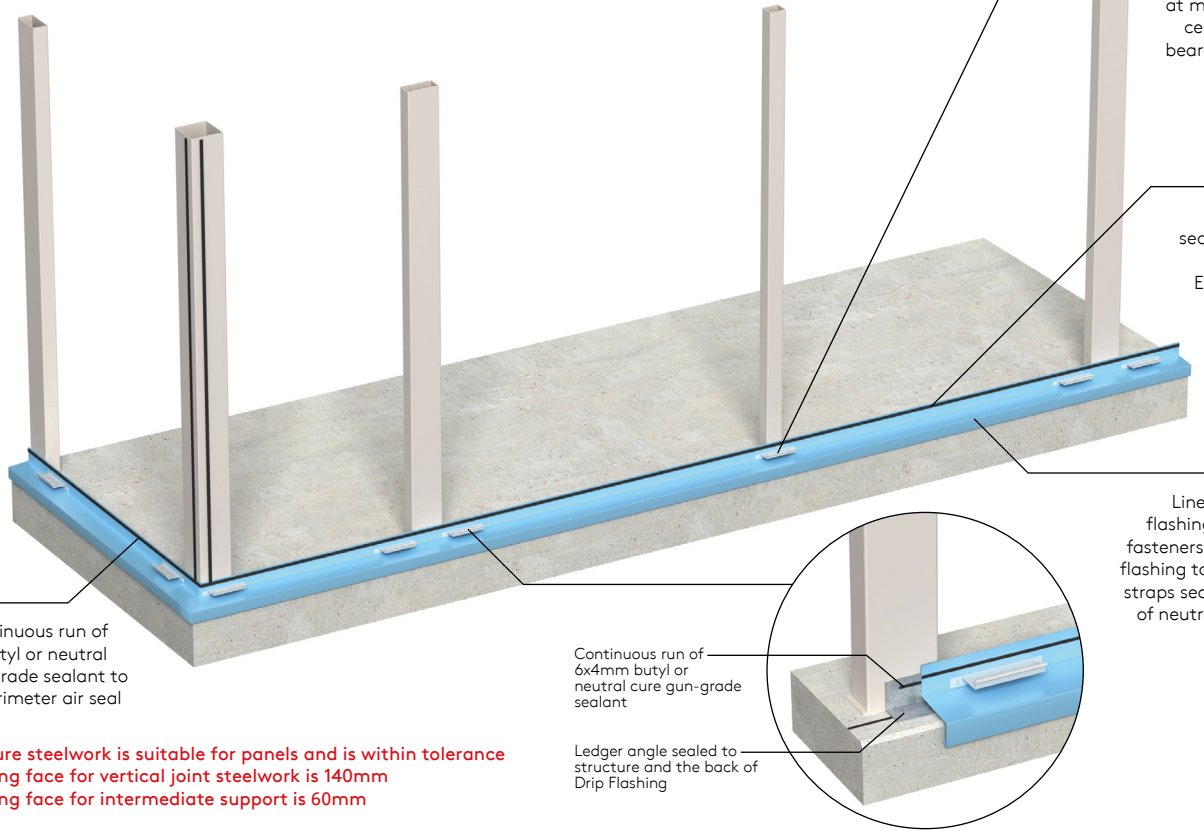

Note: Ensure steelwork is suitable for panels and is within tolerance
Min. bearing face for vertical joint steelwork is 140mm
Min. bearing face for intermediate support is 60mm

Steps 5 to 8

Note: Installations may require additional fasteners depending on wind loadings specification. Check project specific details.

7
Install primary fasteners through the male joint at each panel end into vertical rail location

8
Install primary fasteners at intermediate support position

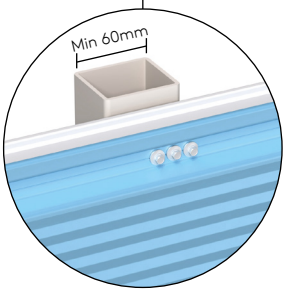

P1

6
Locate first panel (**P1**) on panel bearers ensuring panel is evenly spaced and correctly positioned between vertical joint centres

Alternative Method

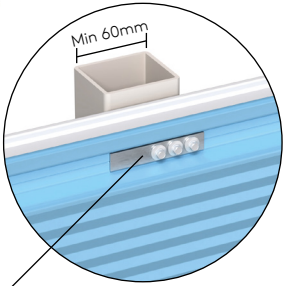

5

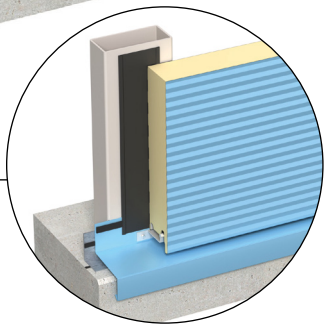

A VJ2 EPDM bubble gasket is required at each vertical panel joint to provide an air seal. Apply gasket to the vertical steel member, ensure that it overlaps the vertical leg of the drip flashing. Ensure the vertical steel face is continuous, cover flashings required where gap is greater than 20mm

Optional 3, 4, or 5 hole pre-punched spreader washers may be used to improve structural spans where fastener capacity is the limiting factor. Sufficient steel bearing to be provided 3no washer requires min 60mm 4no washer requires min 70mm 5no washer requires min 90mm. Contact Kingspan for advice

Steps 9 to 10

10

Lower the next panel (**P2**) into position ensuring that the factory applied weather seal is compressed and that the AWP filler remains in position. Install primary fasteners as per item **7** and **8**

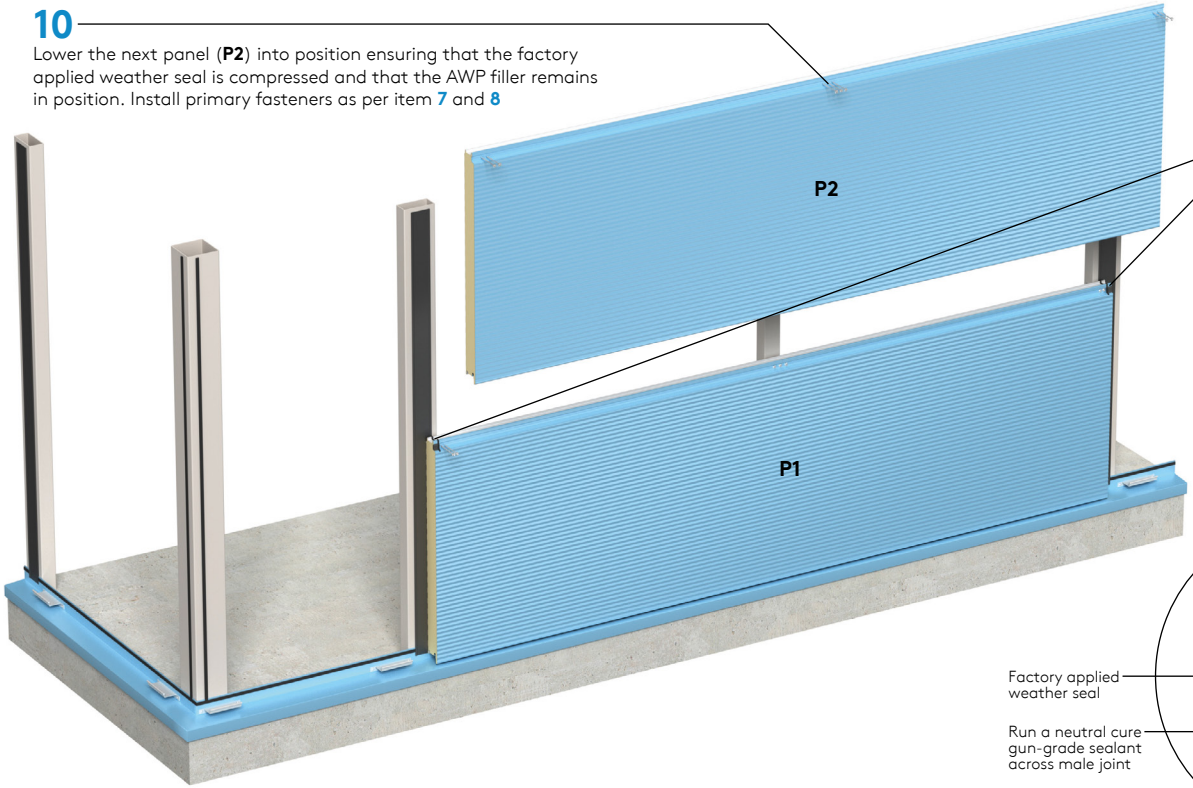

9

Fit AWP filler at panel ends, and apply a neutral cure gun-grade sealant across male joint

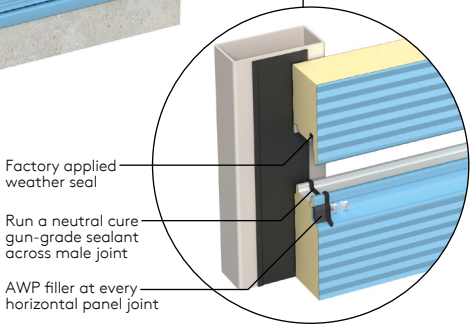

Steps 11 to 12

Note: Panels can be installed in either a tiered or coursed sequence.
A number of base details are available, see Kingspan standard construction details.
Visually check internal liner joint to ensure panels are joined fully.
Check panel cover width module as works progress to ensure "creep" does not occur, particularly important when windows are incorporated into the elevation

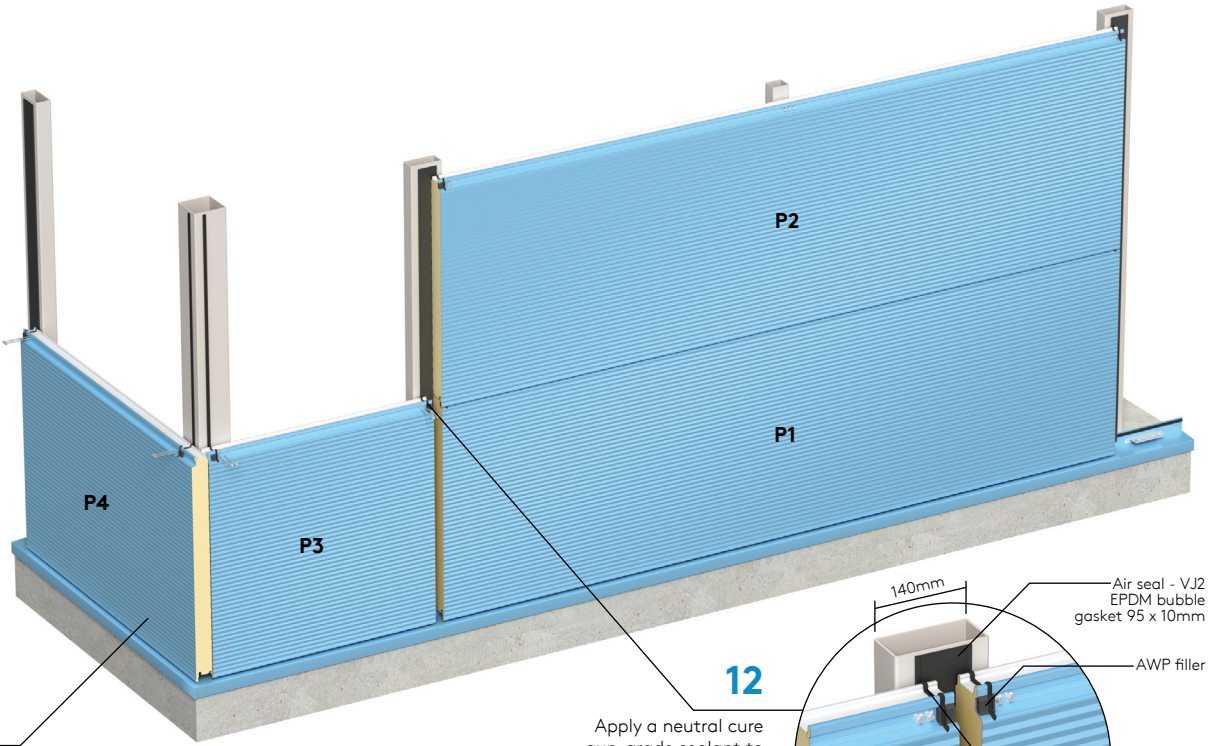

11

Locate panels (**P3** & **P4**) on the panel bearers and installed the primary fasteners through the male joint

12

Apply a neutral cure gun-grade sealant to male joint and AWP filler at panel ends as previous

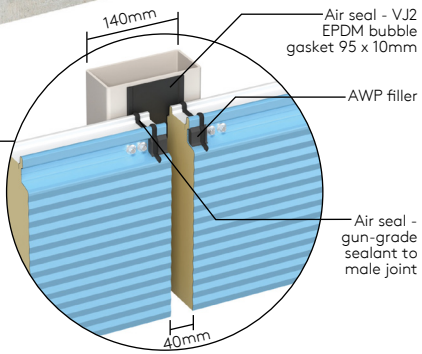

Steps 13 to 15

13

Lower panels (**P5** & **P6**) into position ensuring that the factory applied weather seal is compressed and that the AWP filler remains in position. Install main fasteners through the male joint

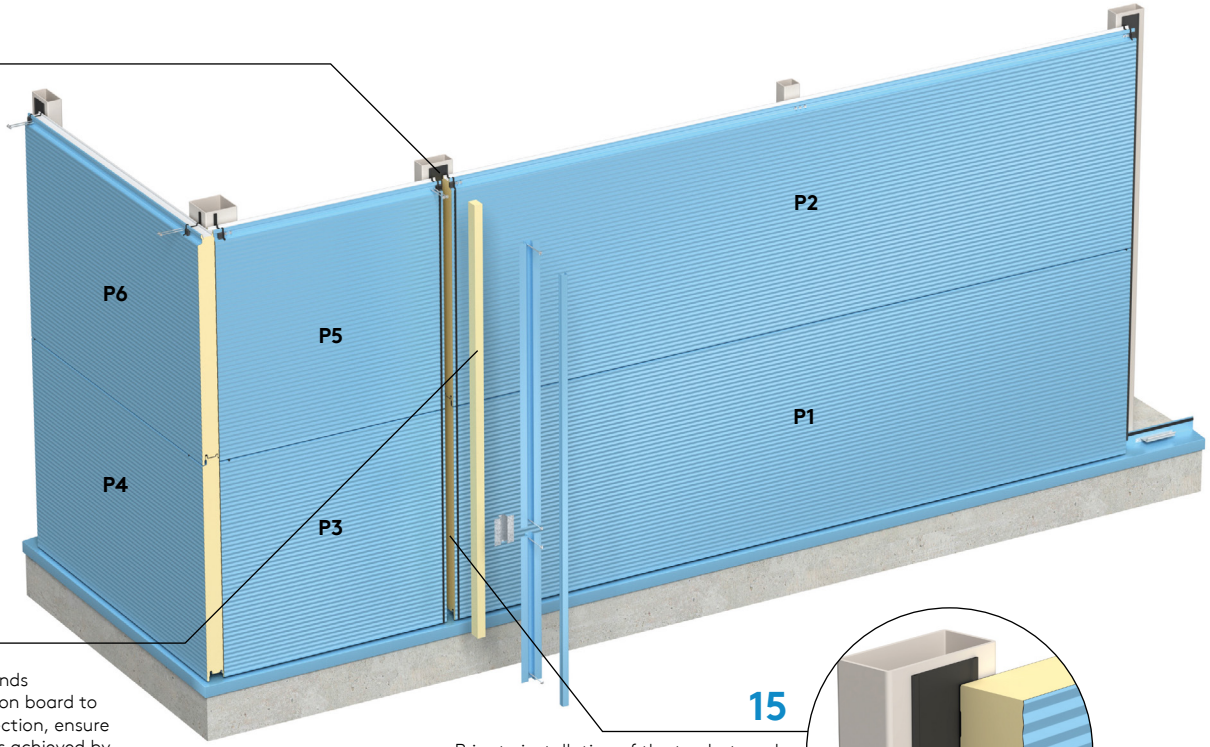

14

The gap between the panel ends is to be filled with PIR insulation board to a depth to suit the top hat section, ensure that continuity of insulation is achieved by filling any gaps with canister applied fire-rates canister foam.

Note: There are several types of vertical joint options. This guide assumes that a standard steel top hat with flush insert detail is being used

15

Prior to installation of the top hat apply neutral cure gun-grade sealant to horizontal panel joint at panel ends, in line with AWP filler to prevent wind driven rain ingress

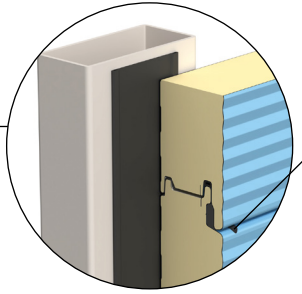

Steps 16 to 18

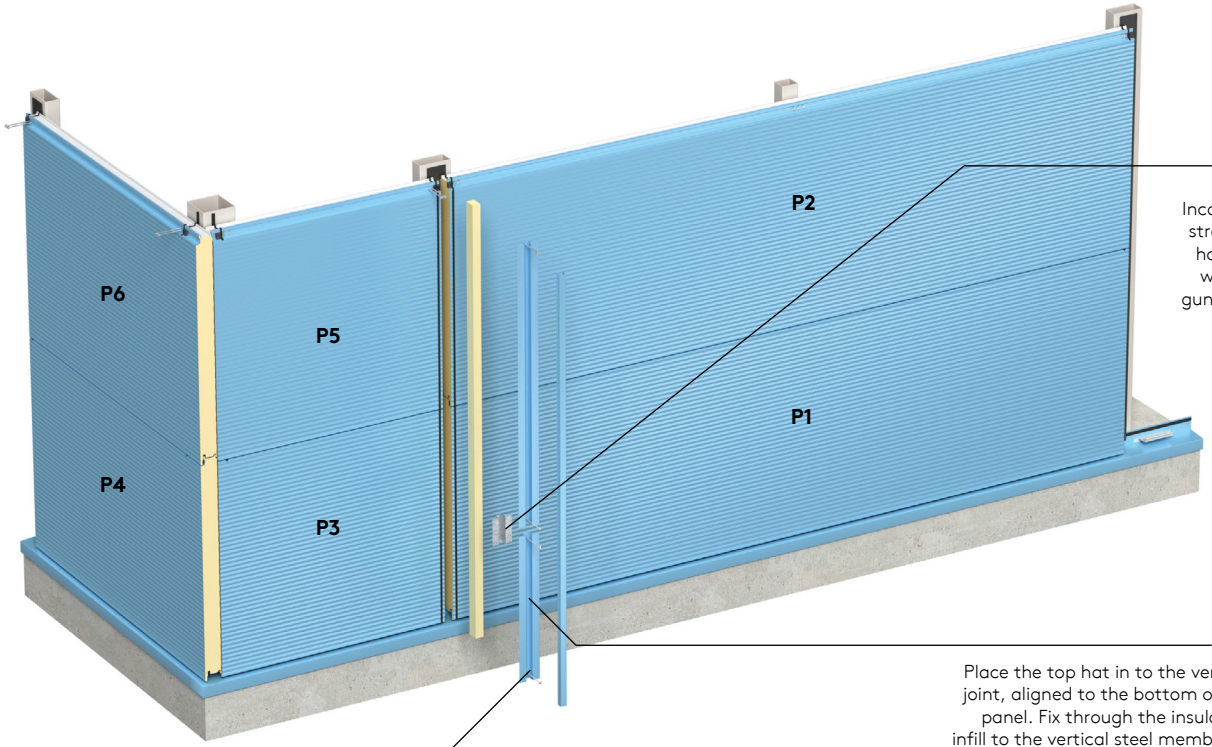

18

Incorporate a butt strap into the top hat joint, sealing with two runs of gun-grade sealant

17

Place the top hat in to the vertical joint, aligned to the bottom of the panel. Fix through the insulation infill to the vertical steel member at max. 500mm centres, ensuring top hat is pulled tightly against panel to ensure effective weather seal. Care must be taken not to overdrive

16

Apply 6 x 4mm butyl sealant to internal legs of top hat (or to panel)

Note: When using WV (Wave) profile, use 9 x 6mm PVC foam tape

Steps 19

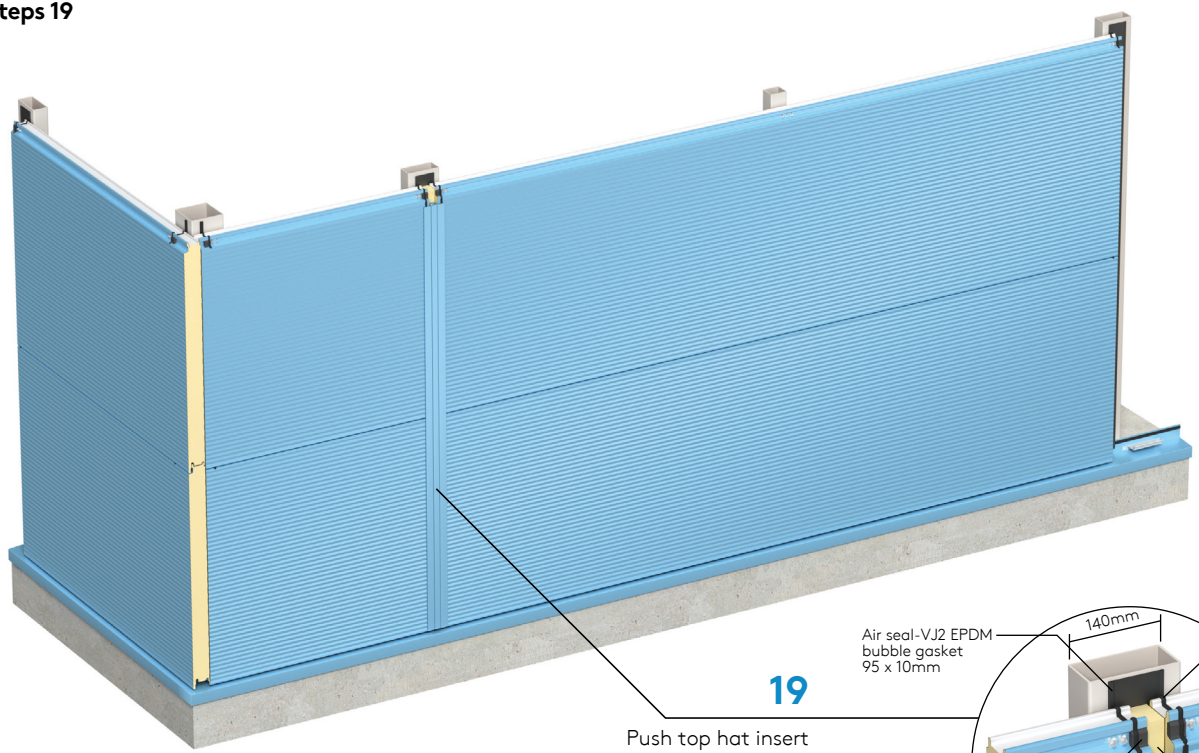
19
Push top hat insert into position
140mm
Air seal-VJ2 EPDM bubble gasket 95 x 10mm
Air seal - gun-grade sealant to male joint
AWP filler
Site applied PIR insulation
6 x 4mm butyl sealant
Top hat and insert

Steps 20

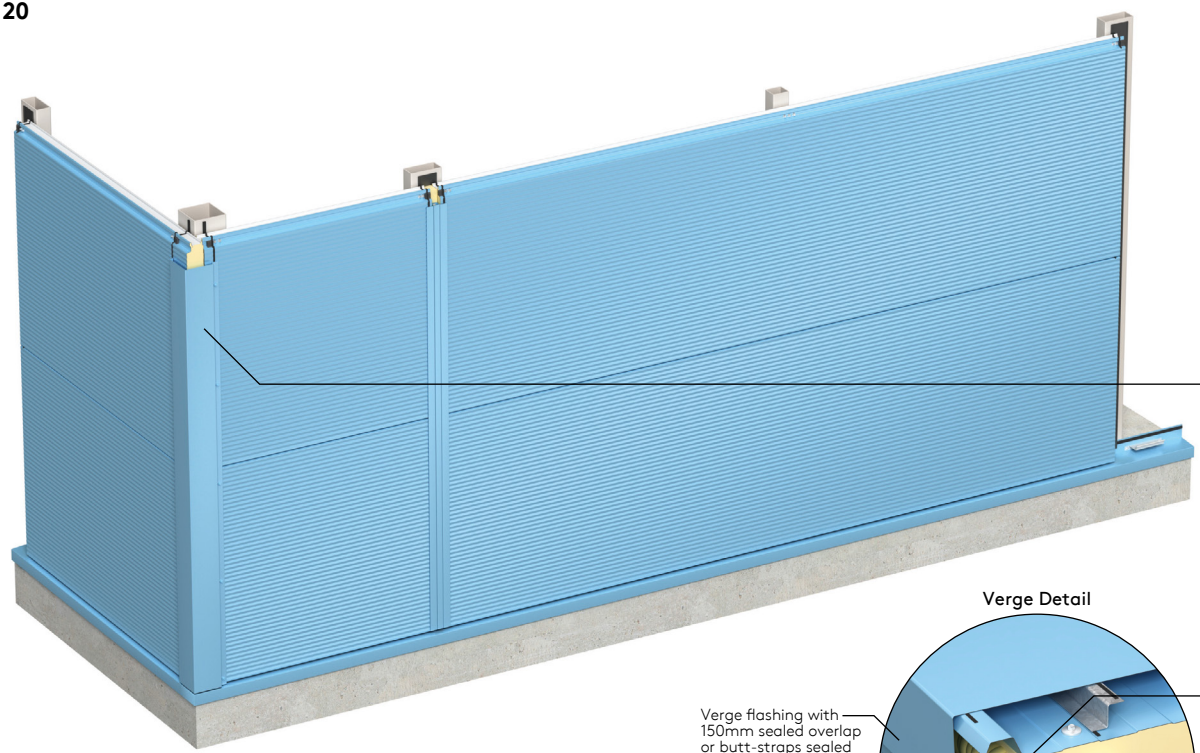

20
Install vertical external corner flashings

Verge Detail

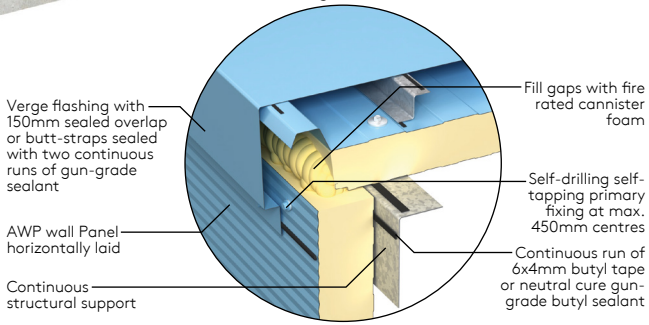

Steps 20

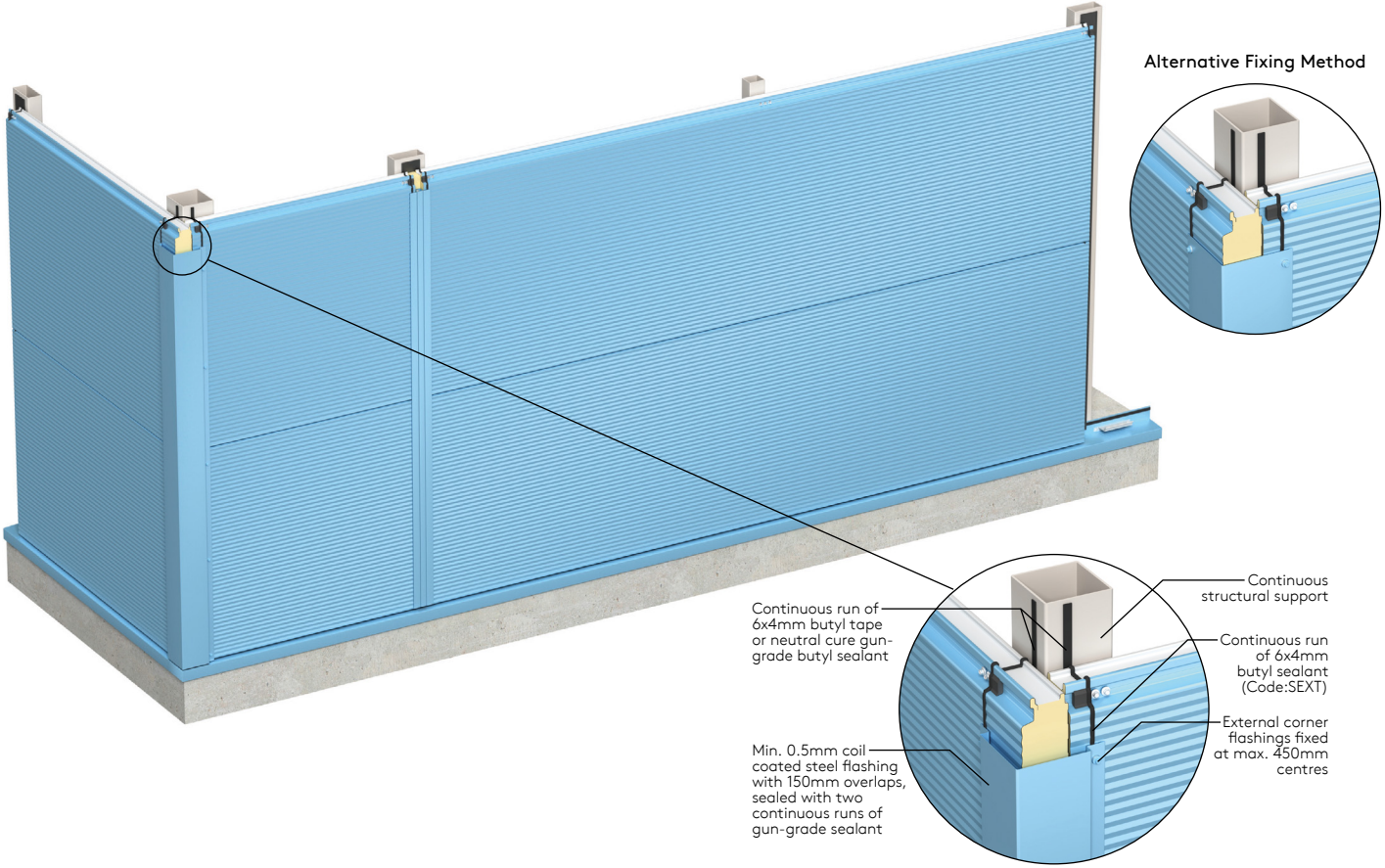
Alternative Fixing Method
Continuous run of 6x4mm butyl tape or neutral cure gun-grade butyl sealant
Min. 0.5mm coil coated steel flashing with 150mm overlaps, sealed with two continuous runs of gun-grade sealant
Continuous structural support
Continuous run of 6x4mm butyl sealant (Code:SEXT)
External corner flashings fixed at max. 450mm centres

Panel Handling

Appropriate personnel protective equipment should always be worn to avoid cuts and abrasions to installers and panels.
Individual panels should always be lifted from a pack and not dragged over others.
The weight of individual panels for lifting can be determined from the information on the packing slip.
For larger panels the contractor would normally arrange to use appropriate material installation equipment to help lift the panels into position.

Protecting Film
When panels are supplied with a plastic protective film this should be removed during site installation.

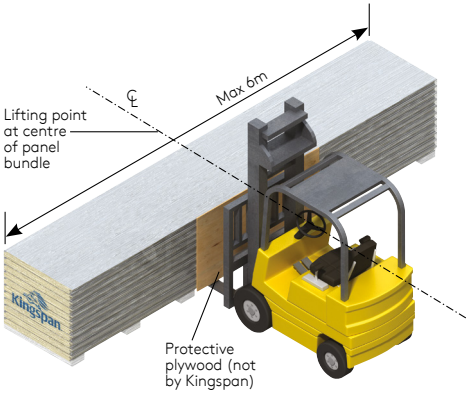

The recommended loading / unloading method for bundles less than or equal to 6m is to use a single forklift with widely spaced forks placed under the centre of the bundle as shown.

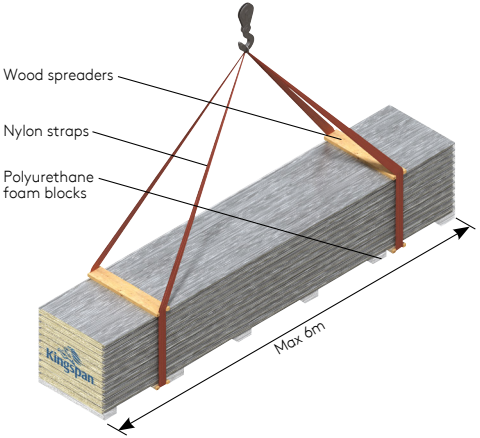

The recommended lifting method for bundles no more than or equal to 6m can be handled with a crane by using nylon straps and wood spreaders as shown.

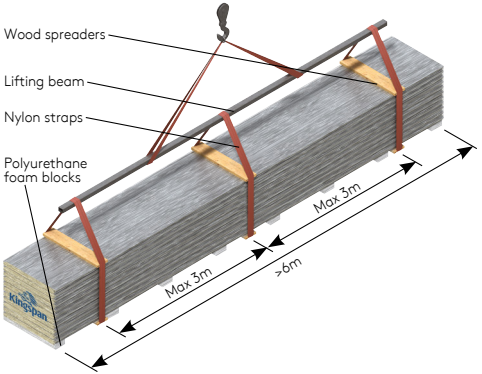

The recommended lifting method for bundles more than 6m, by crane, is by using three points of support. To prevent damage from nylon straps, use wood spreaders at top and bottom at lifting locations as shown.

For illustration purposes only

Caution

Individual panels should never be moved in a flat position as excessive flexing may result. Excessive flexing ruptures a panel's core, permanently distorts the facings and may lead to thermal blistering. When moving a panel, it must be turned on its edge first, then supported at each end with as many men as necessary to safely handle.

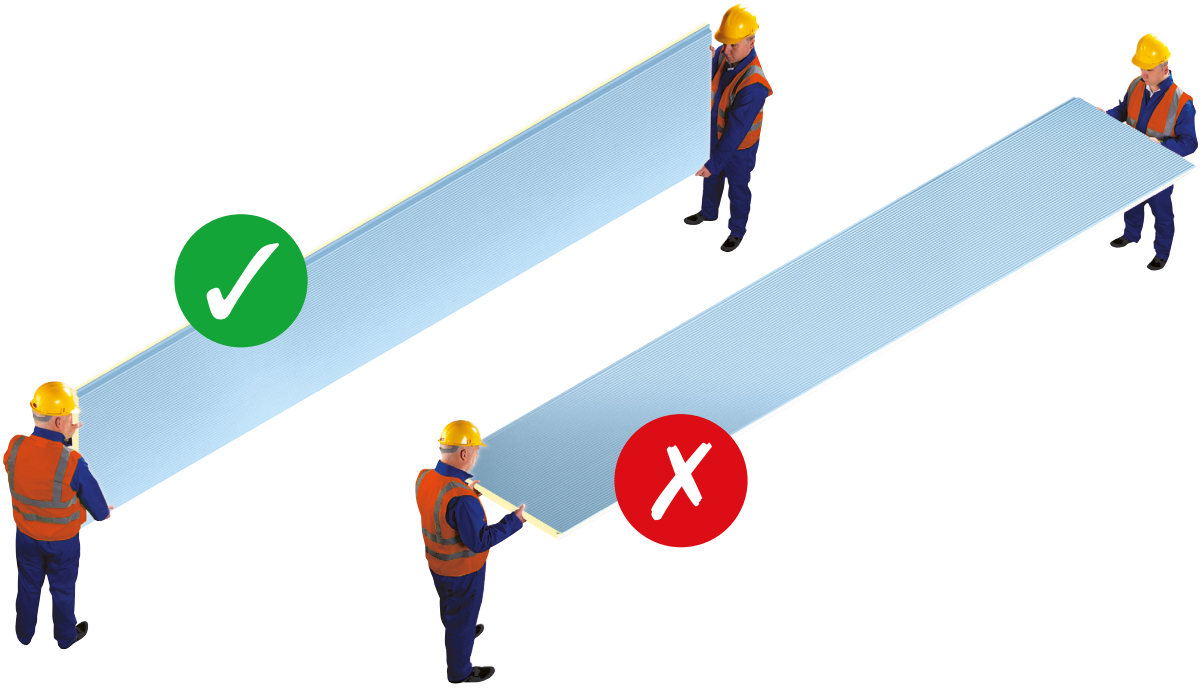

Installation guides are available for most of Kingspan insulated roof and wall panels.
For the most up to date version of this Installation guide please scan the QR code below or please call Kingspan on:

AUS: +61 2 8889 3000
www.panels.kingspan.com/en-au

For the most up-to-date version of this document please scan or click here.

For the product offering in other markets please contact your local sales representative or visit www.kingspanpanels.com

Care has been taken to ensure that the contents of this publication are accurate, but Kingspan Insulated Panels and its subsidiary companies do not accept responsibility for errors or for information that is found to be misleading. Suggestions for, or description of, the end use or application of products or methods of working are for information only and Kingspan Insulated Panels and its subsidiaries accept no liability in respect thereof.

Third Issue | 23/09/2026